LOEWE.

# Kundendienst Ergänzungs-anleitung

230-90248.950

zur
Serviceanleitung
230-90247.920

Concept Plus 7000 52431

C 9003 "S-Pal"
Chassis 884-85030...
(Stereo, 24", 28", FB, 110°)

Concept Plus 7000
Art.-Nr. 52431.00
52431.40

Concept Plus 6300
Art.-Nr. 52430.00
52430.40

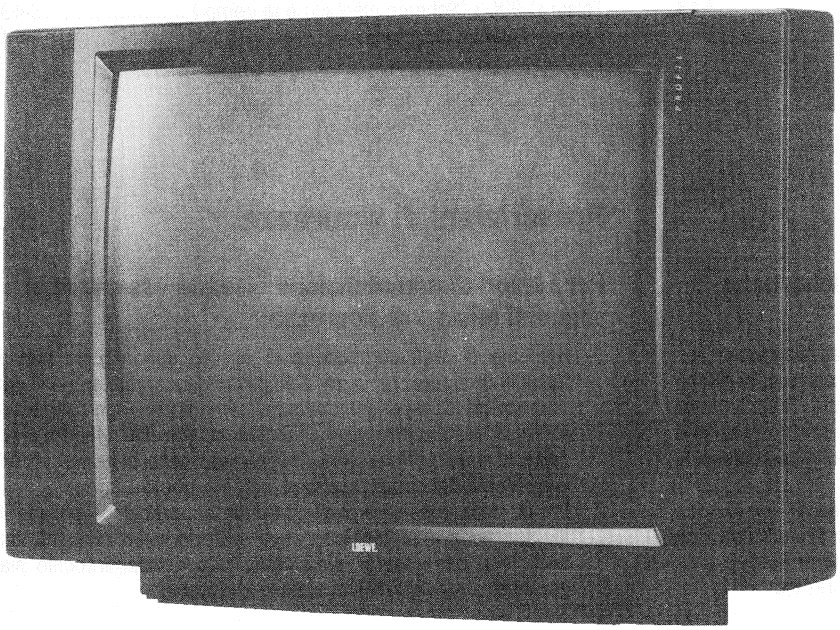

PROFIL 7000 52480

Profil 7000
Art. Nr. 52480.00
52480.22
52480.40

Profil 6300
Art. Nr. 52483.00
52483.22
52483.40

Loewe Opta GmbH.
96305 Kronach . Postf. 1554
96317 Kronach . Industriestraße 11
Telefon (0 92 61) 990. Telex 642 62(
Telefax 0 92 61/9 94 13
Telegramm loewevideo.
Bildschirmtext *50705# (Info)
*50705990# (ET-B(

## (D) deutsch

# Inhaltsverzeichnis

### Kapitel 1 Allgemeines


Sicherheitsvorschriften ..... 1-2
Verdrahtungsplan ..... 1-4


### Kapitel 2 Schaltbilder und Leiterplatten


| | Schaltbild, | Ltpl. |
|---|---|---|
| Bildrohrplatte | 2-1 | 2-1 |
| Tuner/ZF 85137 | 2-3 | 2-2 |
| Tuner/ZF 85187 | 2-5 | 2-7 |
| Bedienteil 85841 | 2-8 | 2-9 |
| Bedienteil 85709 | 2-10 | 2-11 |
| NICAM-Decoder | 2-12 | 2-13 |
| SAT-Empfangseinheit (III) | 2-15 | 2-14 |
| SAT-Adapter | 2-17 | 2-17 |
| S-VHS-Schnittstelle (I) | 2-19 | 2-18 |


### Kapitel 3 Ersatzteilelisten


Baugruppenübersicht ..... 3-1
Profil 6300/52483 ..... 3-3
Profil 7000/52480 ..... 3-10
Concept Plus 6300/52430 ..... 3-16
Concept Plus 7000/52431 ..... 3-23
Chassis 85030.134/.135/.136 ..... 3-30
Bedienteil 85709.050 ..... 3-35
Bedienteil 85841.050 ..... 3-36
Bildrohrplatte 83616.063 ..... 3-37
NICAM-Decoder 84947.052 ..... 3-38
S-VHS-Schnittstelle (I) 85002.051 ..... 3-38
VT-Decoder 85004.055 ..... 3-39
VT-Decoder 85004.057 ..... 3-39
SAT-Empfangseinheit (III) 85442.101 ..... 3-40


### Anhang


LOEWE-Niederlassungen ..... 3-42
Service-Mode-Befehle ..... 3-43
Abgleichanweisung ..... 3-43
Option Bytes Tabelle ..... 3-43
Chassis C 9003 (Schaltbild + Leiterplatte) ..... 3-43
Auslandsvertretungen ..... 3-44


## (I) italiano

# Indice

### Capitolo 1 Generale


Norme di sicurezza ..... 1-2
Schema di connessioni ..... 1-4


### Capitolo 2 Scheme elettrico e di componenti


| | Schema, | Piastra |
|---|---|---|
| Cinescopio | 2-1 | 2-1 |
| Tuner/FI 85137 | 2-3 | 2-2 |
| Tuner/FI 85187 | 2-5 | 2-7 |
| Unità di comando 85841 | 2-8 | 2-9 |
| Unità di comando 85709 | 2-10 | 2-11 |
| Decodificatore NICAM | 2-12 | 2-13 |
| Predisposizione SAT (III) | 2-15 | 2-14 |
| Adattore SAT | 2-17 | 2-17 |
| Interfaccia S-VHS (I) | 2-19 | 2-18 |


### Capitolo 3 Lista ricambi


Ordinamento dei gruppi ..... 3-1
Profil 6300/52483 ..... 3-3
Profil 7000/52480 ..... 3-10
Concept Plus 6300/52430 ..... 3-16
Concept Plus 7000/52431 ..... 3-23
Telaio 85030.134/.135/.136 ..... 3-30
Unità di comando 85709.050 ..... 3-35
Unità di comando 85841.050 ..... 3-36
Piastra cinescopio 83616.063 ..... 3-37
Decodificatore NICAM 84947.052 ..... 3-38
Interfaccia S-VHS (I) 85002.051 ..... 3-38
Decodificatore televideo 85004.055 ..... 3-39
Decodificatore televideo 85004.057 ..... 3-39
Predisposizione SAT (III) 85442.101 ..... 3-40


### Appendice


Succursale LOEWE ..... 3-42
Comandi di service mode ..... 3-43
Istruzione allineamento ..... 3-43
Tabella Option Bytes ..... 3-43
Telaio C 9003 (Scheme elettrico e di comp.) ..... 3-43
Rappresentanza all'estero ..... 3-44


# Sicherheitsvorschriften

### Bei Wartungsarbeiten sind folgende Sicherheitsmaßnahmen zu beachten:

1. Da verschiedene Teile dieser Geräte Sicherheitsfunktionen aufweisen nur Original-Hersteller-Ersatzteile verwenden. Kritische Teile im Netzteil sollten nicht durch ähnliche Teile anderer Hersteller ersetzt werden. Alle kritischen Teile sind im Schaltbild und in der Platinendarstellung mit dem Symbol ⚠ gekennzeichnet.
2. Vor der Auslieferung eines reparierten Gerätes an den Kunden muß der Wartungstechniker das Gerät einer gründlichen Prüfung unterziehen um sicherzustellen, daß sicherer Betrieb ohne Gefahr von elektrischen Schlägen gewährleistet ist.

# Prescrizioni di sicurezza

### Per i lavori di manutenzione bisogna osservare le seguenti misure di sicurezza:

1. Siccome diverse componenti di questo apparecchio hanno funzioni di sicurezza, usare solo pezzi di ricambio originali del fabbricante. Componenti critici dell'alimentatore non devrebbero venire sostituite con componenti analoghe di altri fabbricanti. Tutte le parti critiche sono evidenziate nello schema e nel diagramma dei circuiti stampati con il simbolo ⚠ .
2. Prima della consegna al cliente di un apparecchio riparato, il tecnico della manutenzione deve sottoporlo ad un controllo minuzioso per essere sicuri che l'uso dell'apparecchio sia garantito senza pericoli di scosse elettriche.

## (GB) english

# Table of contents

### Chapter 1 General


Safety precautions ..... 1-3
Wiring diagram ..... 1-4


### Chapter 2 Schematic diagrams and P.C.B's


| | Schematic, | P.C.B |
|---|---|---|
| CRT board | 2-1 | 2-1 |
| Tuner/IF 85137 | 2-3 | 2-2 |
| Tuner/IF 85187 | 2-5 | 2-7 |
| Control unit 85841 | 2-8 | 2-9 |
| Control unit 85709 | 2-10 | 2-11 |
| Nicam Decoder | 2-12 | 2-13 |
| SAT (III) Receiver unit | 2-15 | 2-14 |
| SAT Adapter | 2-17 | 2-17 |
| S-VHS Interface (I) | 2-19 | 2-18 |


### Chapter 3 Spare parts lists


Components chart ..... 3-2
Profil Plus 6300/52483 ..... 3-3
Profil Plus 7000/52480 ..... 3-10
Concept Plus 6300/52430 ..... 3-16
Concept Plus 7000/52431 ..... 3-23
Chassis 85030.134/.135/.136 ..... 3-30
Control unit 85709.050 ..... 3-35
Control unit 85841.050 ..... 3-36
CRT P.C.B 83616.063 ..... 3-37
NICAM Decoder 84947.052 ..... 3-38
S-VHS Interface (I) 85002.051 ..... 3-38
Teletext Decoder 85004.055 ..... 3-39
Teletext Decoder 85004.057 ..... 3-39
SAT receiver unit (III) 85442.101 ..... 3-40


### Appendix


LOEWE establishments ..... 3-42
Service mode commands ..... 3-43
Alignment instructions ..... 3-43
Option Bytes Table ..... 3-43
Chassis C 9003 (Schematic diagrams and P.C.B's) ..... 3-43
Foreign representations ..... 3-44


# Safety precautions

### The following precautions should be observed when servicing.

1. Since many parts in the unit have special safely related characteristics, alway use genuine producer replacement parts. Especially critical parts in the power circuit block should not be replaced with other makers. Critical parts marked with ⚠ in the circuit diagram and printed wiring board.
2. Before returning a repaired unit to the customer the service technican must thoroughly test the unit to ascertain that it is completely safe to operate without danger of electrical shock.

## (F) français

# Table des matières

### Chapitre 1 Général


Précautions de sécurité ..... 1-3
Plan de câblage ..... 1-4


### Chapitre 2 Schéma d'électrique et plan de comp.


| | Schéma, | Platine |
|---|---|---|
| Platine tube image, | 2-1 | 2-1 |
| Tuner/FI 85137 | 2-3 | 2-2 |
| Tuner/FI 85187 | 2-5 | 2-7 |
| Bloc de commande 85841 | 2-8 | 2-9 |
| Bloc de commande 85709 | 2-10 | 2-11 |
| Décodeur Nicam | 2-12 | 2-13 |
| Récepteur SAT (III) | 2-15 | 2-14 |
| Adapteur SAT | 2-17 | 2-17 |
| Interface S-VHS (I) | 2-19 | 2-18 |


### Chapitre 3 Liste des piéces de rechange


Correspondances des modules ..... 3-2
Profil 6300/52483 ..... 3-3
Profil 7000/52480 ..... 3-10
Concept Plus 6300/52430 ..... 3-16
Concept Plus 7000/52431 ..... 3-23
Châssis 85030.134/.135/.136 ..... 3-30
Bloc de commande 85709.050 ..... 3-35
Bloc de commande 85841.050 ..... 3-36
Platine tube image ..... 3-37
Décodeur NICAM 84947.052 ..... 3-38
Interface S-VHS (I) 85002.051 ..... 3-38
Décodeur télétexte 85004.055 ..... 3-39
Décodeur télétexte 85004.057 ..... 3-39
Récepteur SAT (III) 85442.101 ..... 3-40


### Appendice


Succursale LOEWE ..... 3-42
Instructions du mode service ..... 3-43
Instruction d'alignement ..... 3-43
Tableau Option Bytes ..... 3-43
Châssis C 9003 (Schéma d'électrique et plan de comp.) ..... 3-43
Représentation à l'étranger ..... 3-44


# Précautions de sécurité

### Les précautions suivantes doivent être observées chaque fois qu'une réparation doit être faite.

1. Etant donné que de nombreux composants de l'appareil possèdent des caractéristiques relatives à la sécurité, utiliser uniquement des pièces de rechange d'origine producteur pour effectuer un remplacement. Ceci se rapporte notamment aux pièces critiques du bloc d'alimentation qui ne doivent en aucun cas être remplacées par celles d'autres fabricants. Les pièces critiques sont accompagnés du symbole ⚠ dans le schéma de montage et sur le schéma de plaque de câblage.
2. Avant de retourner l'appareil réparé au client le technicien doit procéder à un essai complet pour s'assurer qu'il ne présente aucun danger de chocs électriques.

# Verdrahtungsplan • Schema di connessioni • Wiring diagram • Plan de câblage

**! Bedienteil / Control Unit 85709.050**
**• Bedienteil / Control Unit 85841.050**

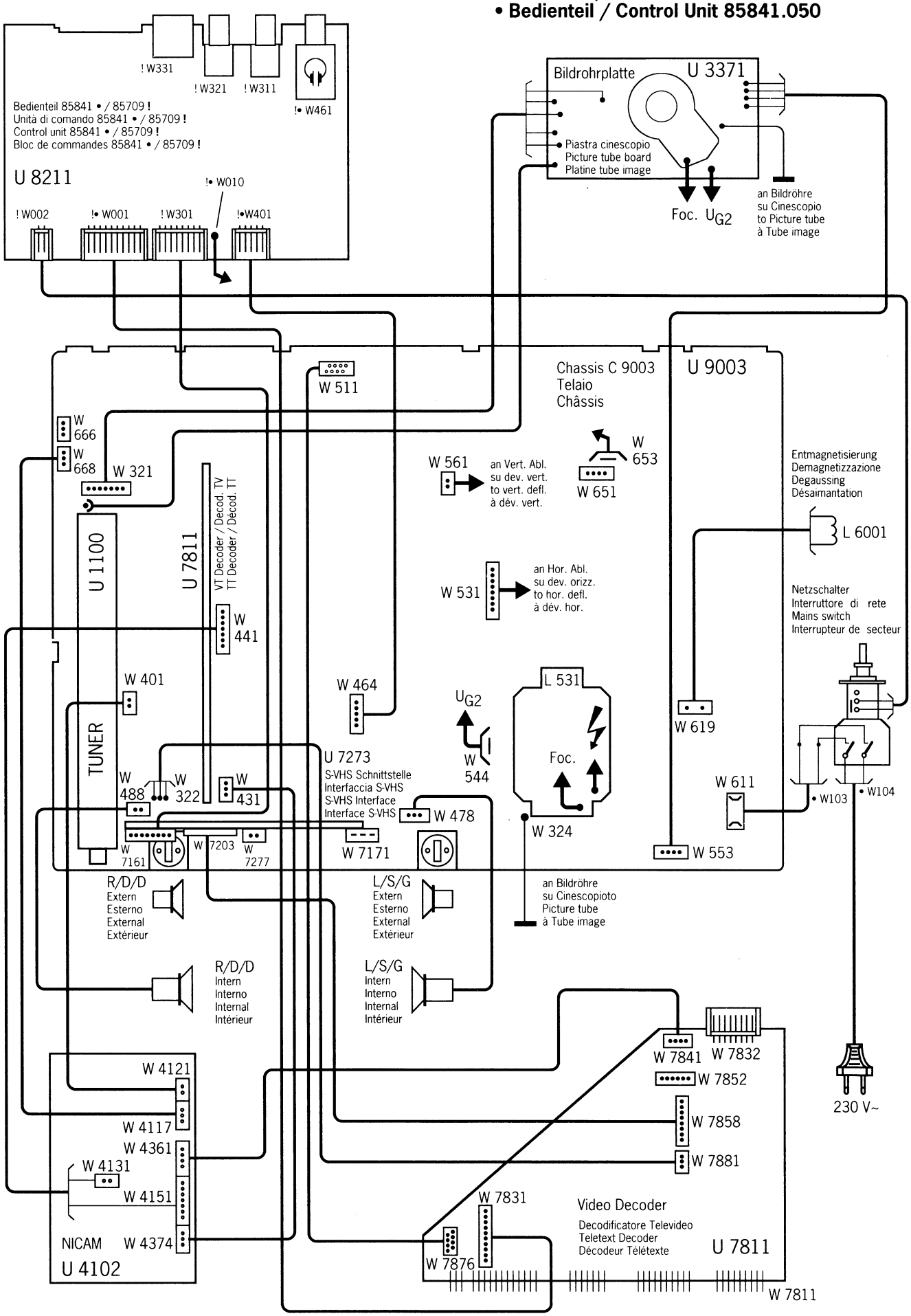

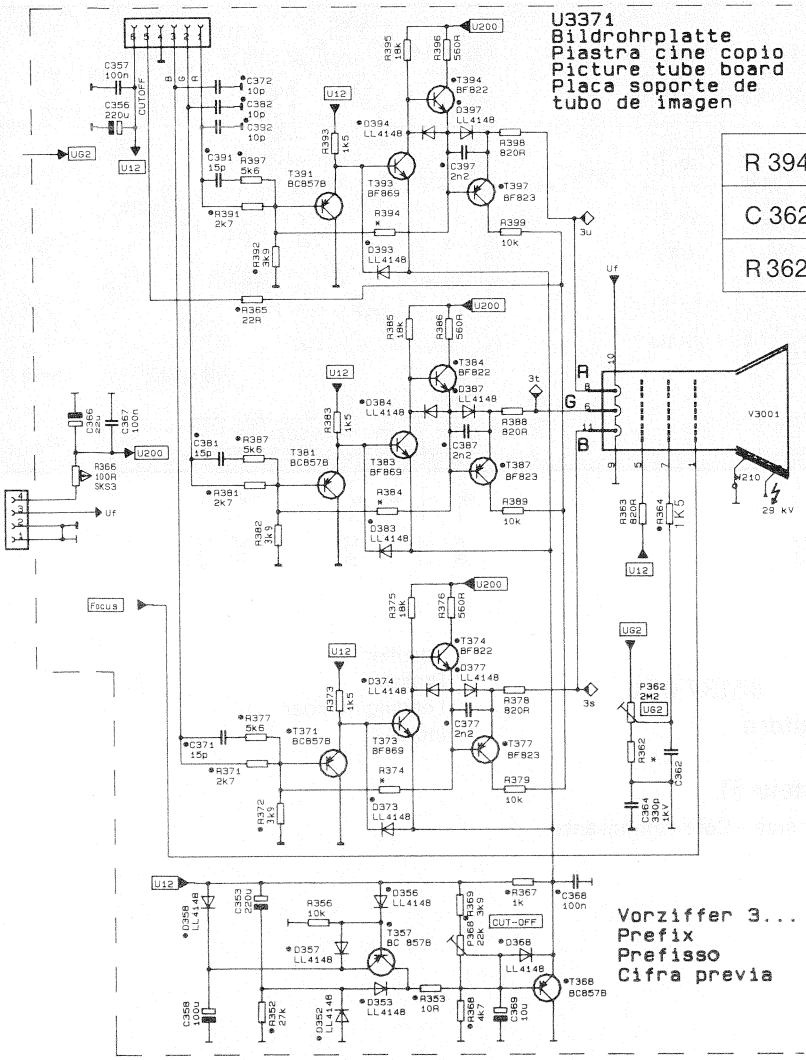


| | |
|---|---|
| R 394/84/74 | 82 K |
| C 362 | 22 n |
| R 362 | 2 M 2 |

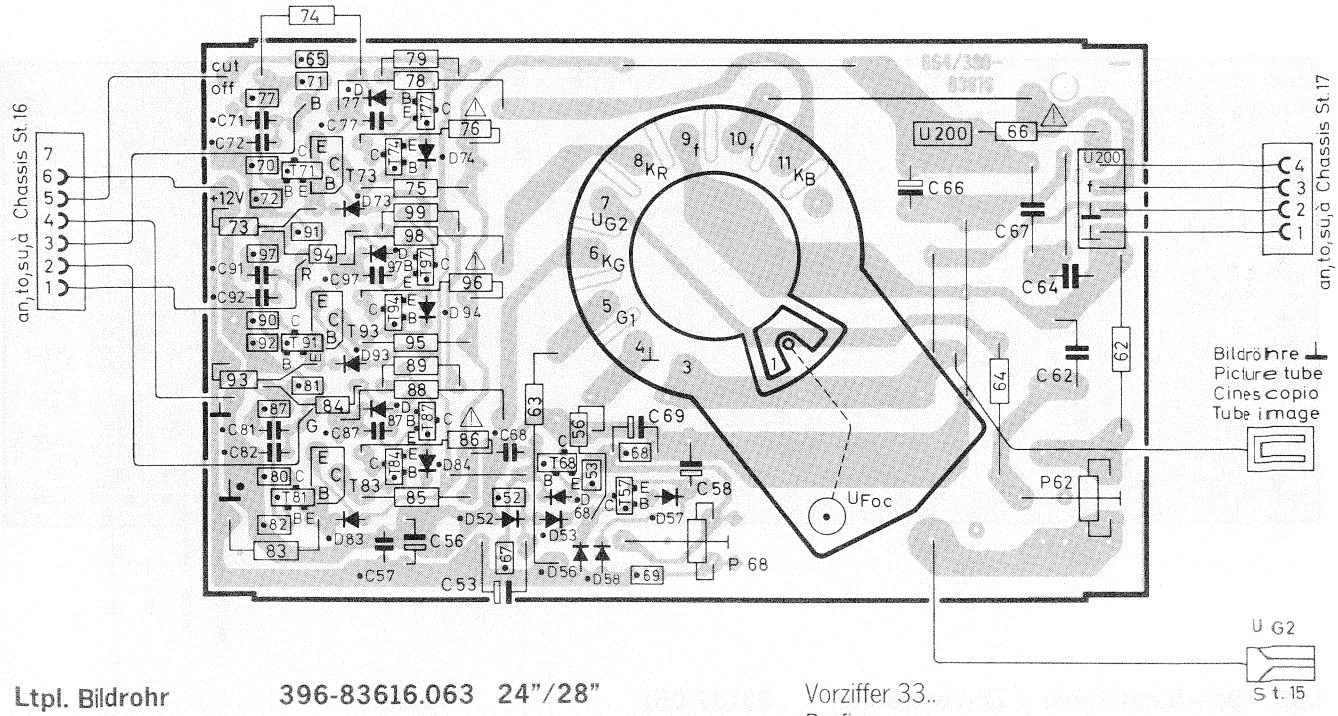


**Ltpl. Bildrohr** **396-83616.063 24"/28"**
**Piastra cinescopio**
**Picture tube board**
**Platine tube image**
**Lötseite** - Lato saldature - Solder side - Côté soudure

Vorziffer 33..
Prefisso
Leading number
Indice

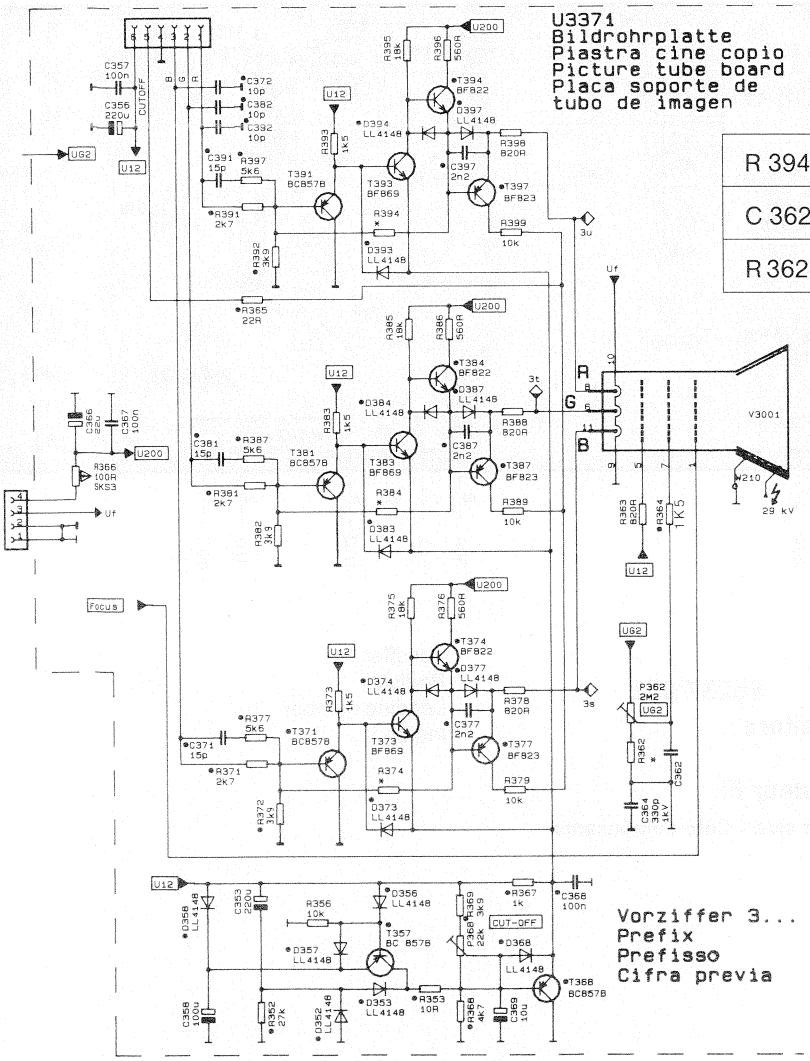


| | |
|---|---|
| R 394/84/74 | 82 K |
| C 362 | 22 n |
| R 362 | 2 M 2 |

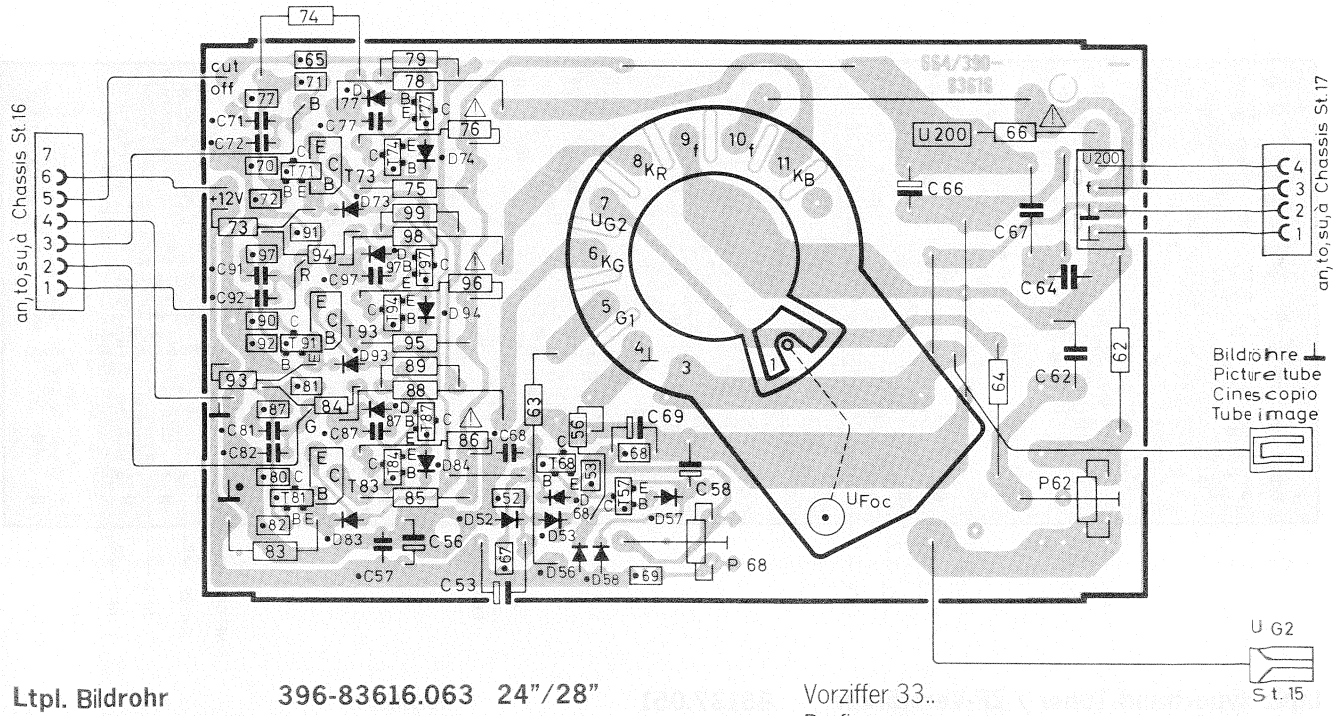


**Ltpl. Bildrohr** **396-83616.063 24"/28"**
**Piastra cinescopio**
**Picture tube board**
**Platine tube image**
**Lötseite - Lato saldature - Solder side - Côté soudure**

Vorziffer 33..
Prefisso
Leading number
Indice

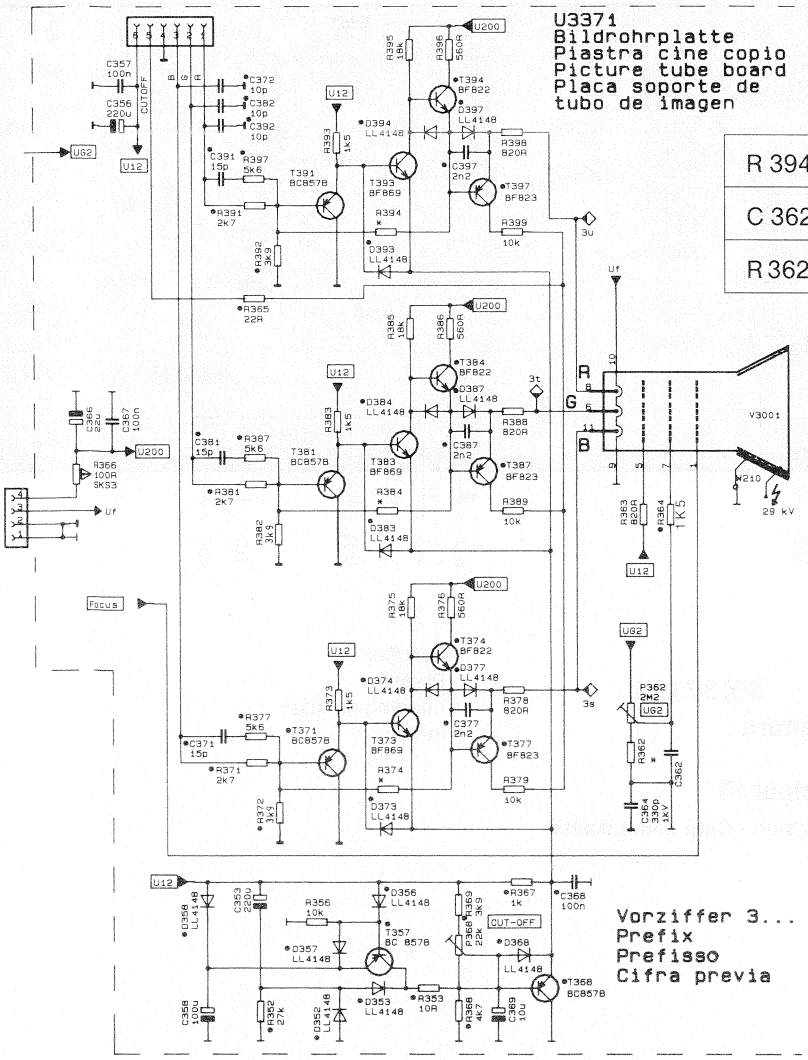


| | |
|---|---|
| R 394/84/74 | 82 K |
| C 362 | 22 n |
| R 362 | 2 M 2 |

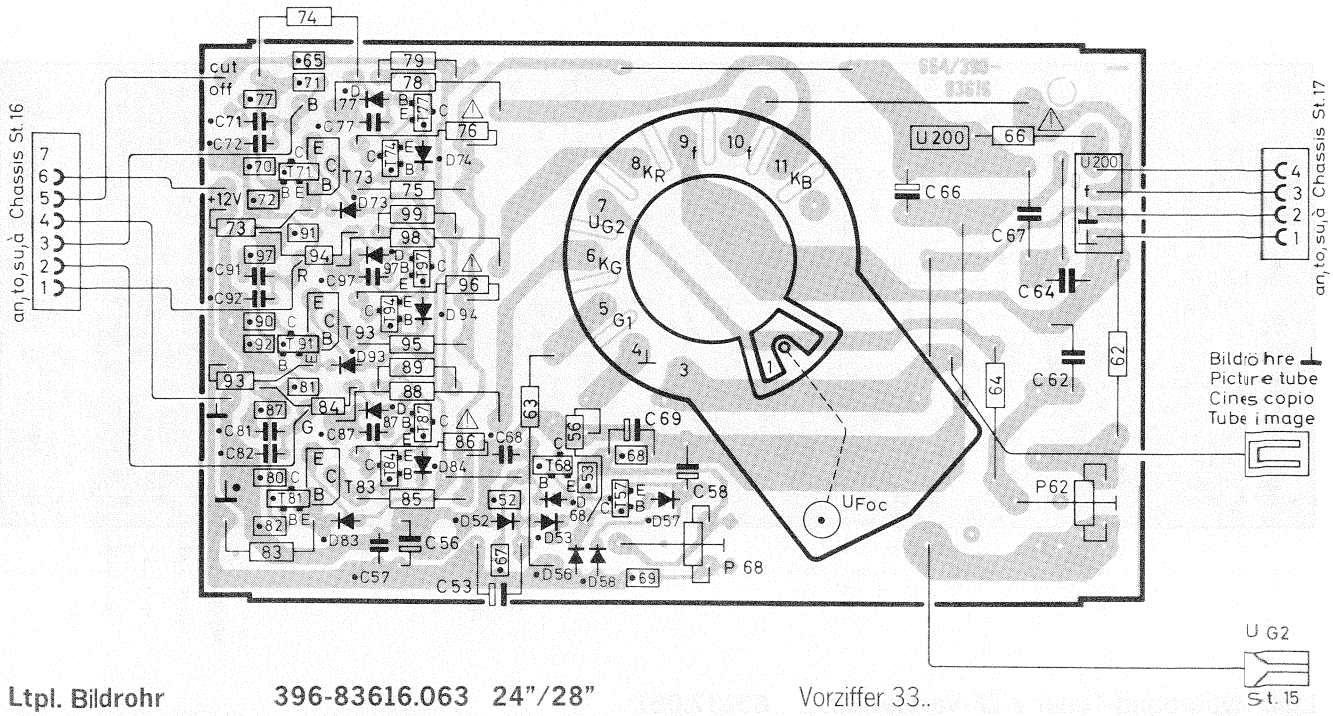


**Ltpl. Bildrohr** **396-83616.063 24"/28"**
**Piastra cinescopio**
**Picture tube board**
**Platine tube image**
**Lötseite - Lato saldature - Solder side - Côté soudure**

Vorziffer 33..
Prefisso
Leading number
Indice

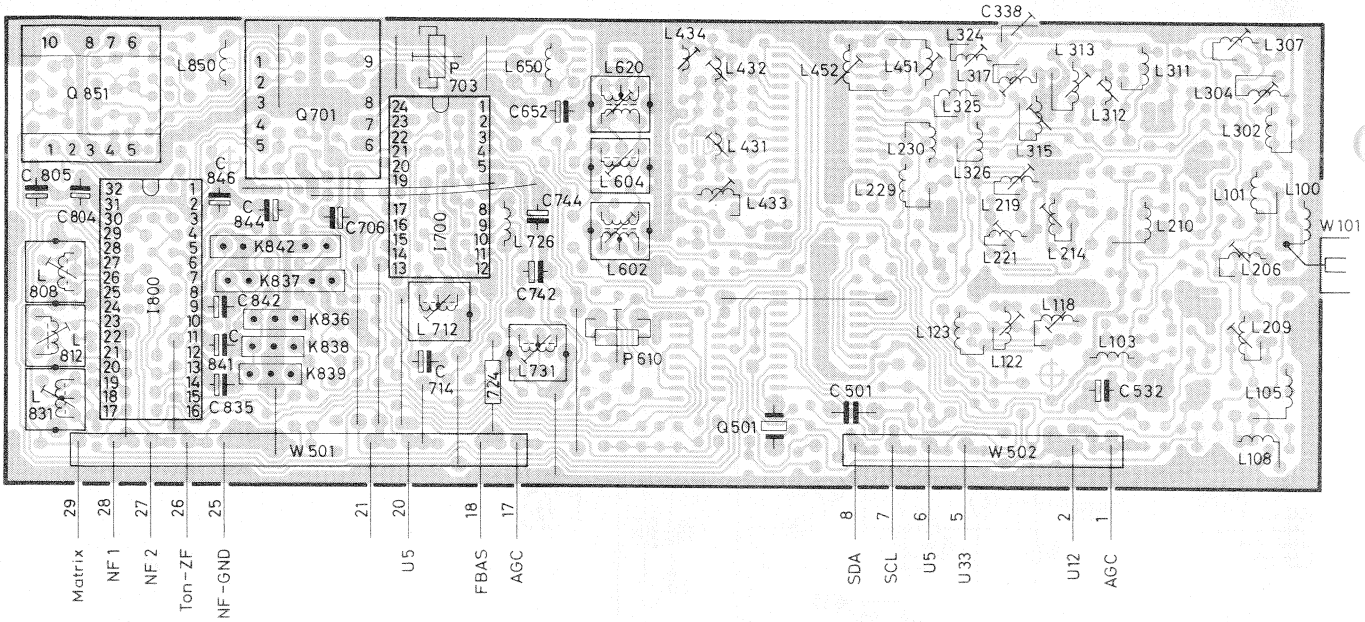


**Ltpl. Hyperband-Tuner / ZF-Verstärker** 85137.051
**Piastra Tuner di iperbanda / FI amplificaitore**
**Hyperband Tuner / IF amplifier P.C.B.**
**Platine Tuner de hyperbande / amplificateur FI**

**Bestückungsseite - Lato componenti - Component side - Côté composants**

Vorziffer 1...
Prefisso
Leading number
Indice

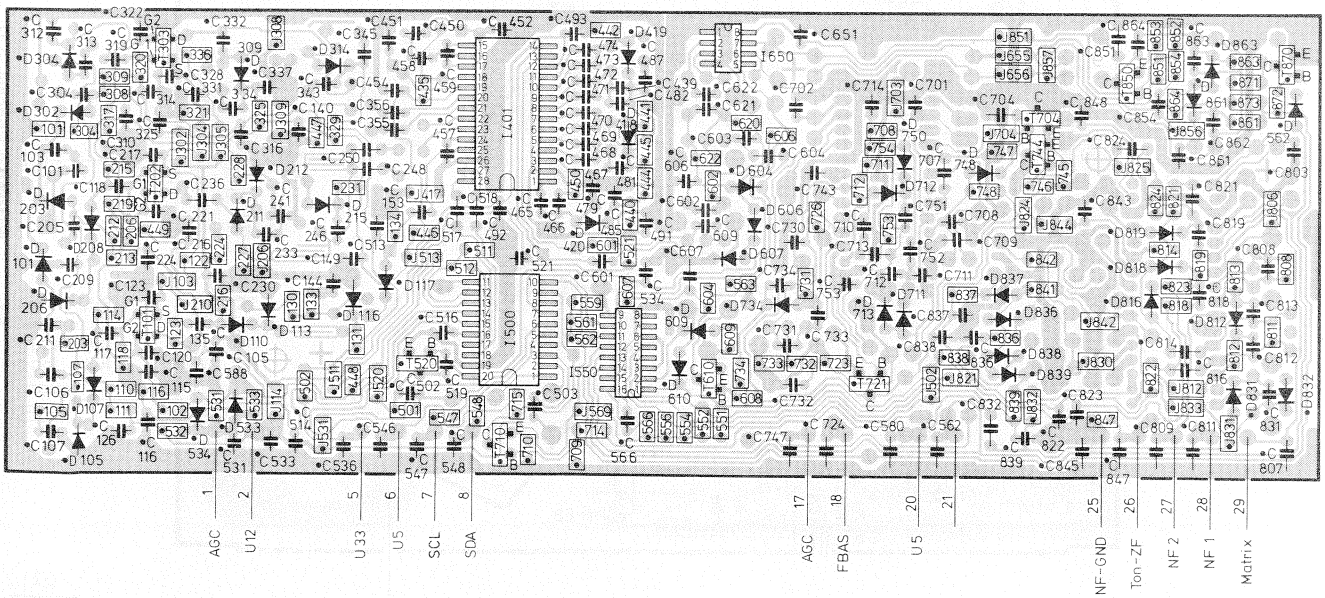


**Ltpl. Hyperband-Tuner / ZF-Verstärker** 85137.051
**Piastra Tuner di iperbanda / FI amplificaitore**
**Hyperband Tuner / IF amplifier P.C.B.**
**Platine Tuner de hyperbande / amplificateur FI**

**Lötseite - Lato saldature - Solder side - Côté soudure**

Vorziffer 1...
Prefisso
Leading number
Indice

# HF/ZF-Block

**B/G-2T-NICAM**
**I-NICAM**
**D/K, L, L1, M**

261-85137.051 U1100
Index "F"
15.2.93

= GND NF
= GND Video
* = Bauteil gedruckt
Component pressed on printed circuit board
Componente impreso en la placa de circuito impreso

VHF-Oszillator und Mischer
Oszillatore VHF
VHF Oscillator and Mixer
Oscillateur VHF

UHF-Vorstufe
Stadio iniziale UHF
UHF input stage
Etage d'entree UHF

VHF-Hyperband-Vorstufe
VHF-hyperband preamplifier
Stadio d'entrata iperbanda VHF
Preamplificador de hiperbanda VHF

Bandschalter und Abstimmspannungserzeugung
Band switch and tuning voltage generator
Commutatore di banda e generatione tensione di sintonizzazione
Selector de bandas y generacion de tension de sintonizacion

Videodemodulator
Demodulatore video
Video demodulator
Demodulateur video

Tondemodulator
Demodulatore suono
Sound demodulator
Demodulateur son

Normumschaltung

Tuner-AGC | U12 TUN | +33V | SDA | SCL | U5 TUN

U5 ZF | Matrix | NF2 | NF1 | NF-GND | Ton-ZF | ZF-AGC | FBAS/BB

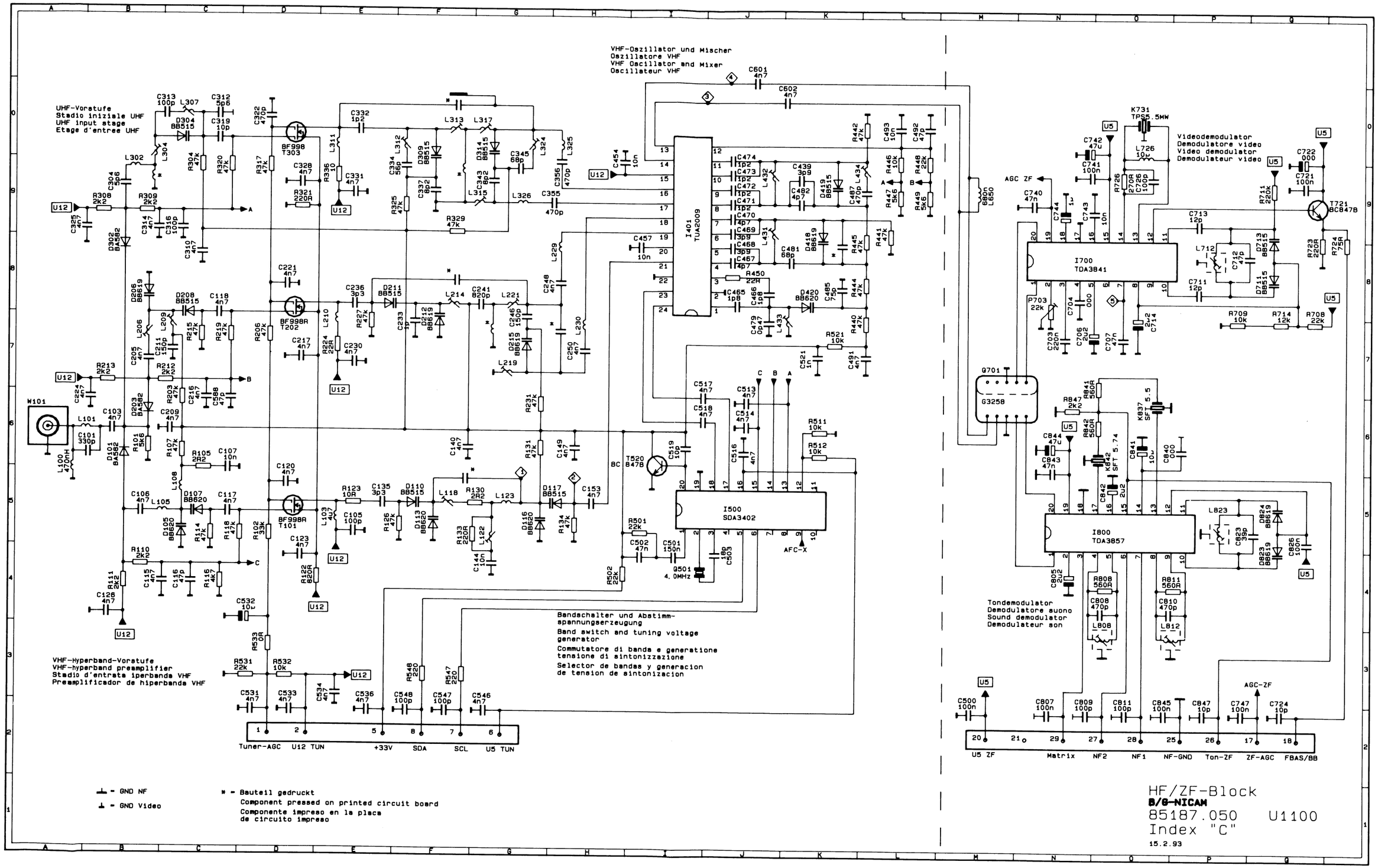


HF/ZF-Block
**B/G-NICAM**
85187.050 U1100
Index "C"
15.2.93

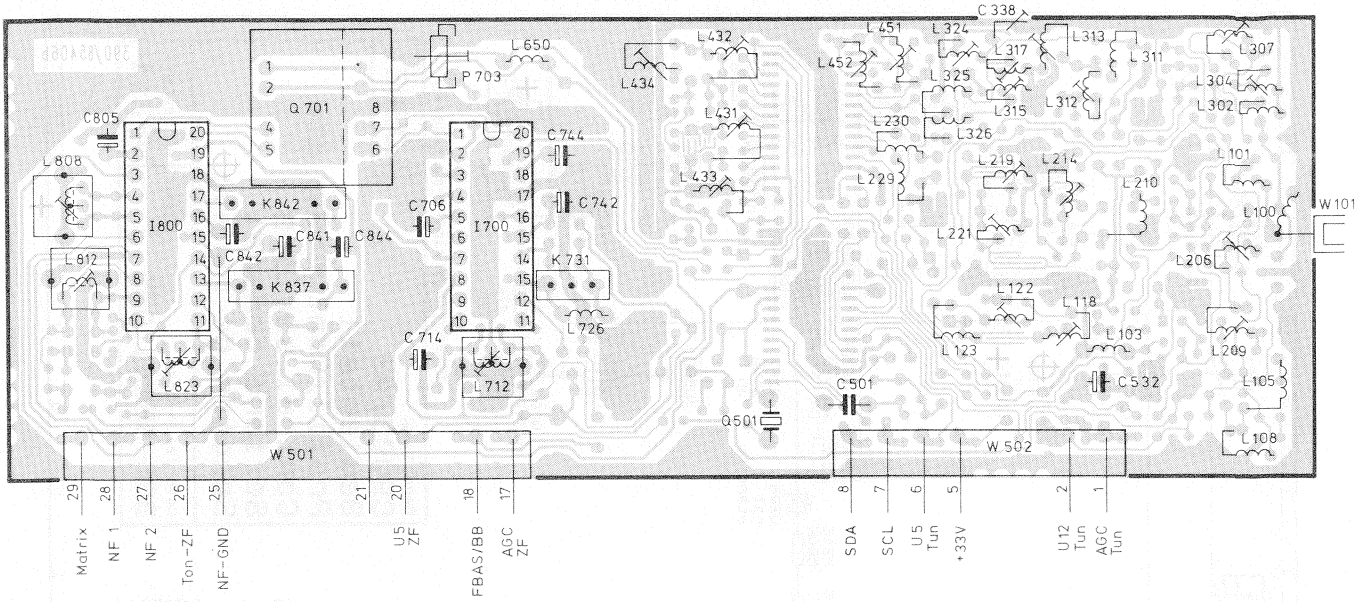


**Ltpl. Hyperband-Tuner / ZF-Verstärker** **85187.050**
**Piastra Tuner di iperbanda / amplificatore FI**
**Hyperband Tuner / IF amplifier P.C.B.**
**Platine Tuner de hyperbande / amplificateur FI**

**Bestückungsseite - Lato componenti - Component side - Côté composants**

Vorziffer 1...
Prefisso
Leading number
Indice

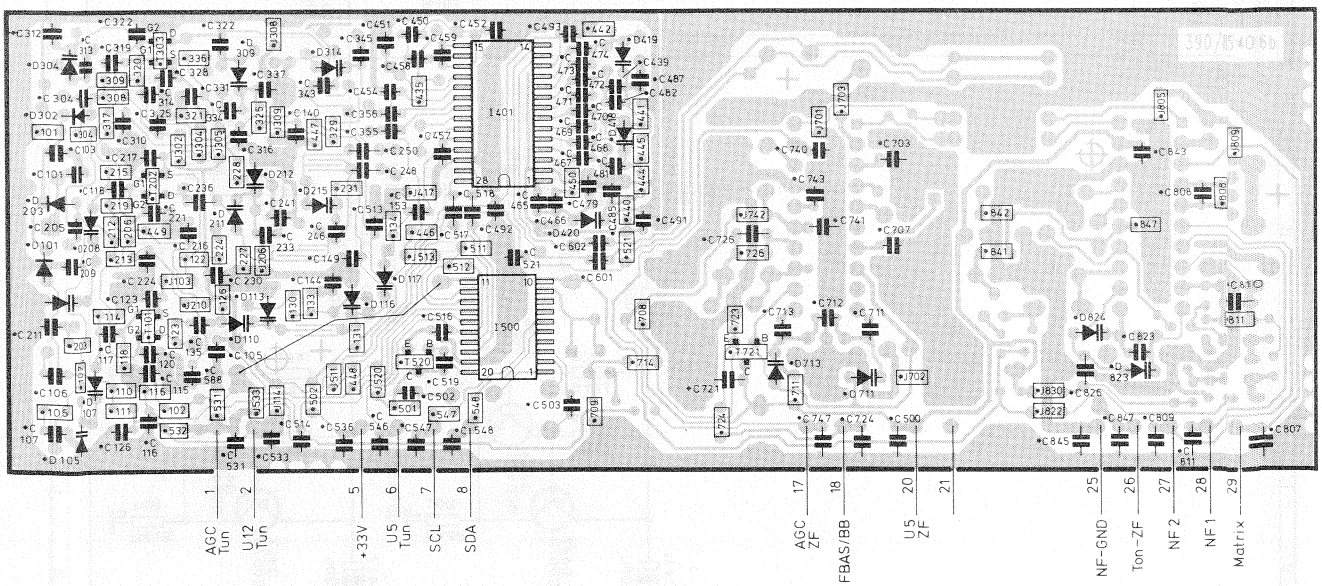


**Ltpl. Hyperband-Tuner / ZF-Verstärker** **85187.050**
**Piastra Tuner di iperbanda / FI amplificaitore**
**Hyperband Tuner / IF amplifier P.C.B.**
**Platine Tuner de hyperbande / amplificateur FI**

**Lötseite - Lato saldature - Solder side - Côté soudure**

Vorziffer 1...
Prefisso
Leading number
Indice

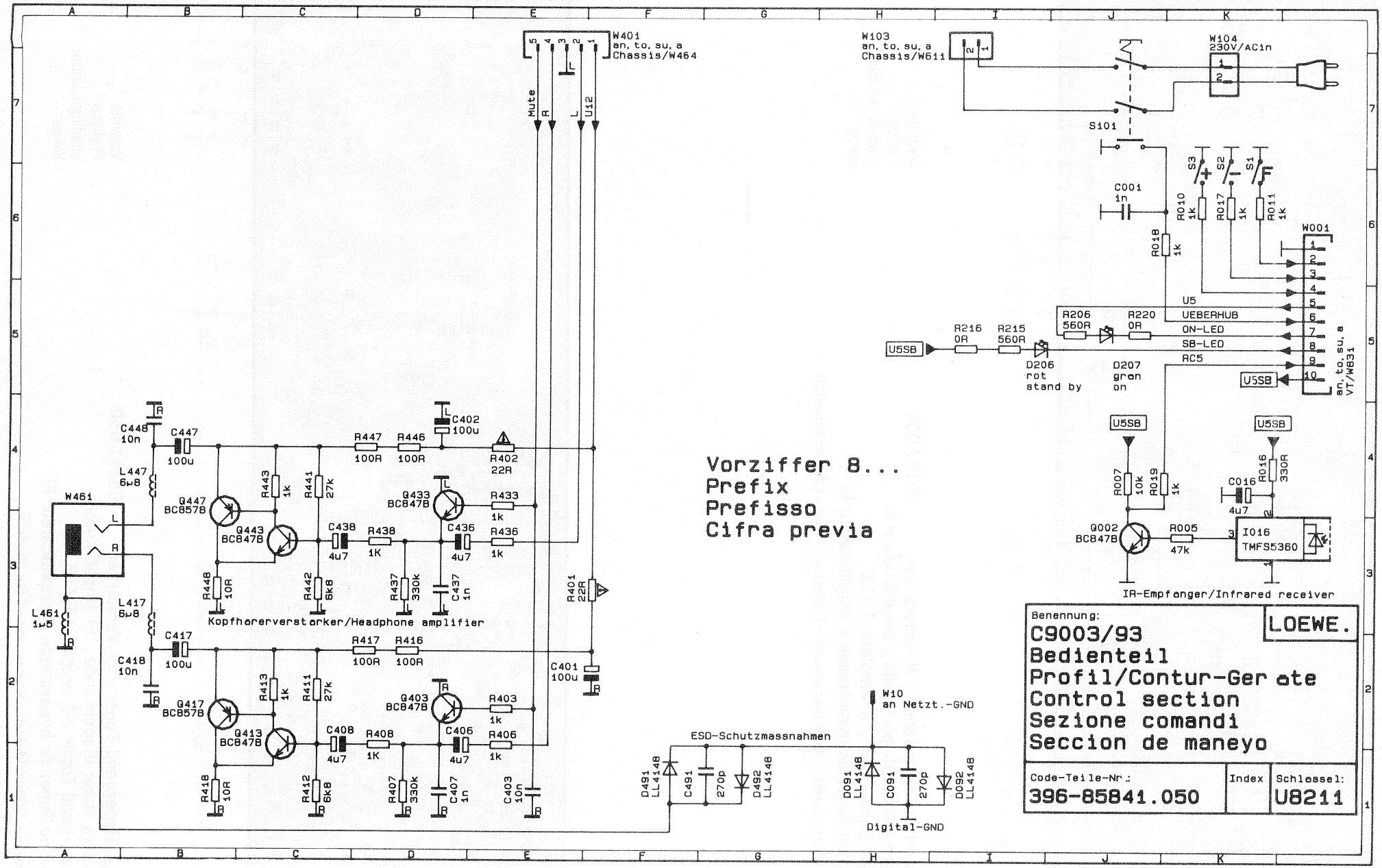
W401
an, to, su, a
Chassis/W464
Mute
R
L
U12
W103
an, to, su, a
Chassis/W611
W104
230V/ACin
S101
S3
S2
S1
C001
1n
R010
1k
R017
1k
R011
1k
R018
1k
W001
U5
R206
560R
R220
0R
UEBERHUB
ON-LED
SB-LED
AC5
U5SB
R216
0R
R215
560R
D206
rot
stand by
D207
gron
on
an, to, su, a
VT/W831
C448
10n
C447
100u
C402
100u
R447
100R
R446
100R
R402
22R
L447
6µ8
W461
L
R
Q447
BC857B
R443
1k
R441
27k
Q443
BC847B
Q433
BC847B
R433
1k
C438
4u7
R438
1K
C436
4u7
R436
1k
R448
10R
R442
6k8
R437
330k
C437
1n
R401
22R
L461
1µ5
L417
6µ8
Kopfhorerverstarker/Headphone amplifier
C417
100u
R417
100R
R416
100R
C418
10n
C401
100u
Q417
BC857B
R413
1k
R411
27k
Q413
BC847B
Q403
BC847B
R403
1k
C408
4u7
R408
1K
C406
4u7
R406
1k
R418
10R
R412
6k8
R407
330k
C407
1n
C403
10n
Vorziffer 8...
Prefix
Prefisso
Cifra previa
R007
10k
R019
1k
C016
4u7
R016
330R
Q002
BC847B
R005
47k
I016
TMFS5360
IR-Empfanger/Infrared receiver
W10
an Netzt.-GND
ESD-Schutzmassnahmen
D491
LL4148
C491
270p
D492
LL4148
D091
LL4148
C091
270p
D092
LL4148
Digital-GND
Benennung:
C9003/93
Bedienteil
Profil/Contur-Ger ate
Control section
Sezione comandi
Seccion de maneyo
LOEWE.
Code-Teile-Nr.:
396-85841.050
Index
Schlassel:
U8211

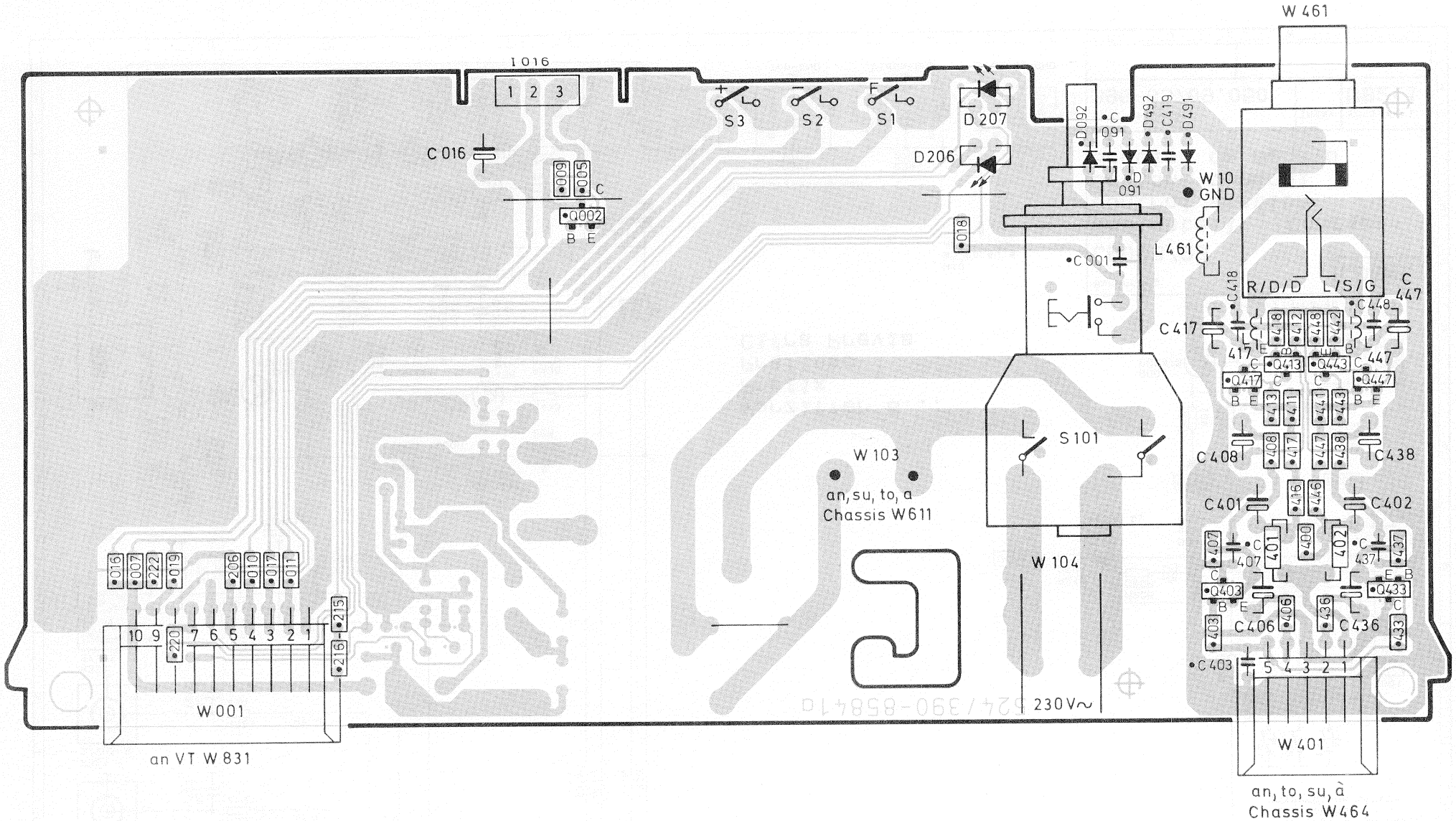


**Ltpl. Bedienteil Profil / Contur 396-85841.050**
**Piastra di comando / Control board / Platine de commandes**
***Lötseite / Lato saldature / Solder side / Côté soudure***

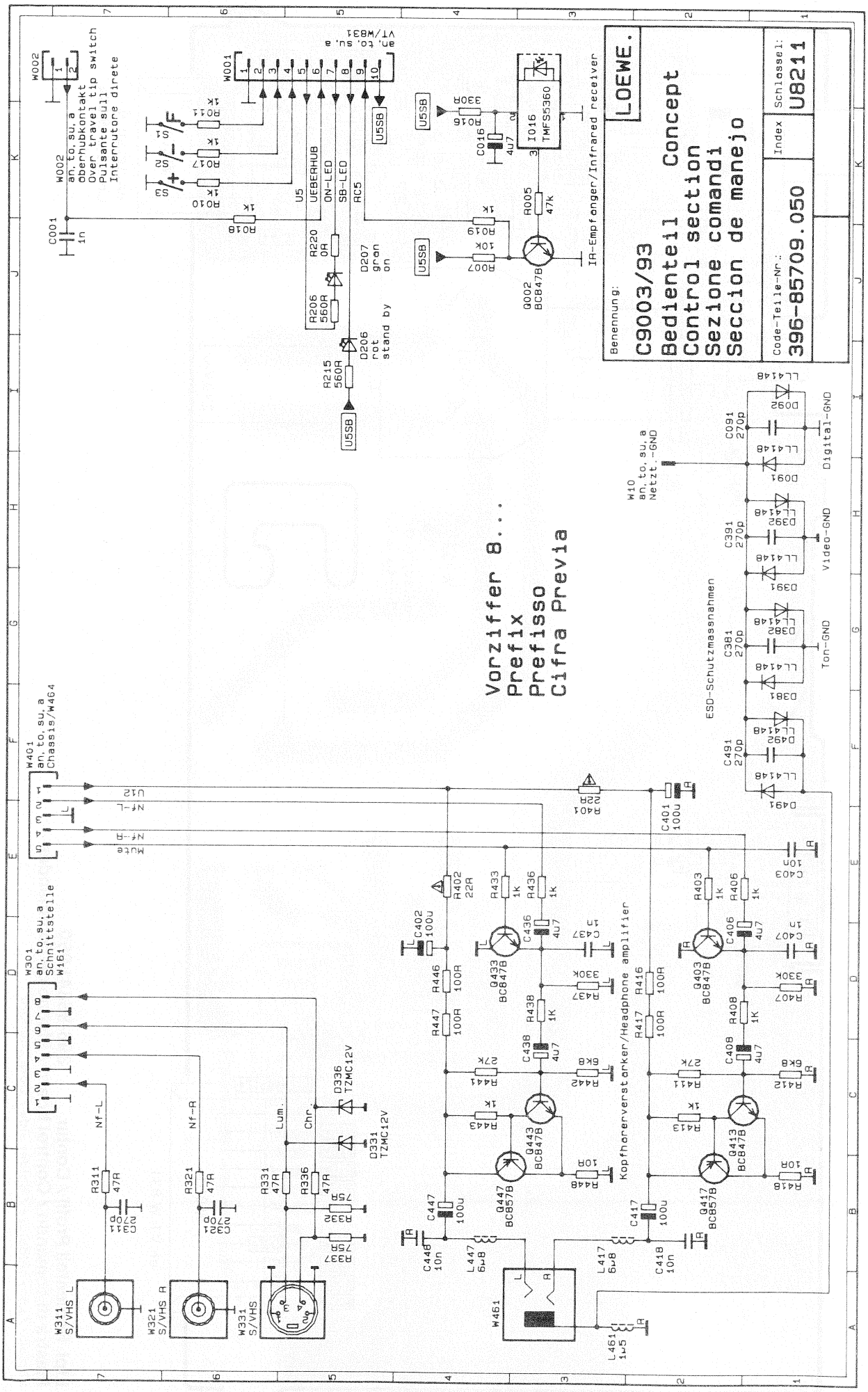
LOEWE.
Benennung:
C9003/93
Bedienteil Concept
Control section
Sezione comandi
Seccion de manejo
Code-Teile-Nr.:
396-85709.050
Index
Schlüssel:
U8211
Vorziffer 8...
Prefix
Prefisso
Cifra Previa
IR-Empfänger/Infrared receiver
Kopfhörerverstärker/Headphone amplifier
ESD-Schutzmassnahmen
Digital-GND
Video-GND
Ton-GND
W10 an.to.su.a Netzt.-GND
W401 an.to.su.a Chassis/W464
W301 an.to.su.a Schnittstelle W161
W002 an.to.su.a oberhubkontakt Over travel tip switch Pulsante sull Interrutore direte
W001 an.to.su.a VT/W831
W311 S/VHS L
W321 S/VHS R
W331 S/VHS
W461
U5SB
U5 UEBERHUB ON-LED SB-LED RC5
D207 gran on
D206 rot stand by
I016 TMFS5360
Q002 BC847B
Q433 BC847B
Q403 BC847B
Q443 BC847B
Q413 BC847B
Q447 BC857B
Q417 BC857B
D336 TZMC12V
D331 TZMC12V
Nf-L
Nf-R
Lum.
Chr.
Mute
U12

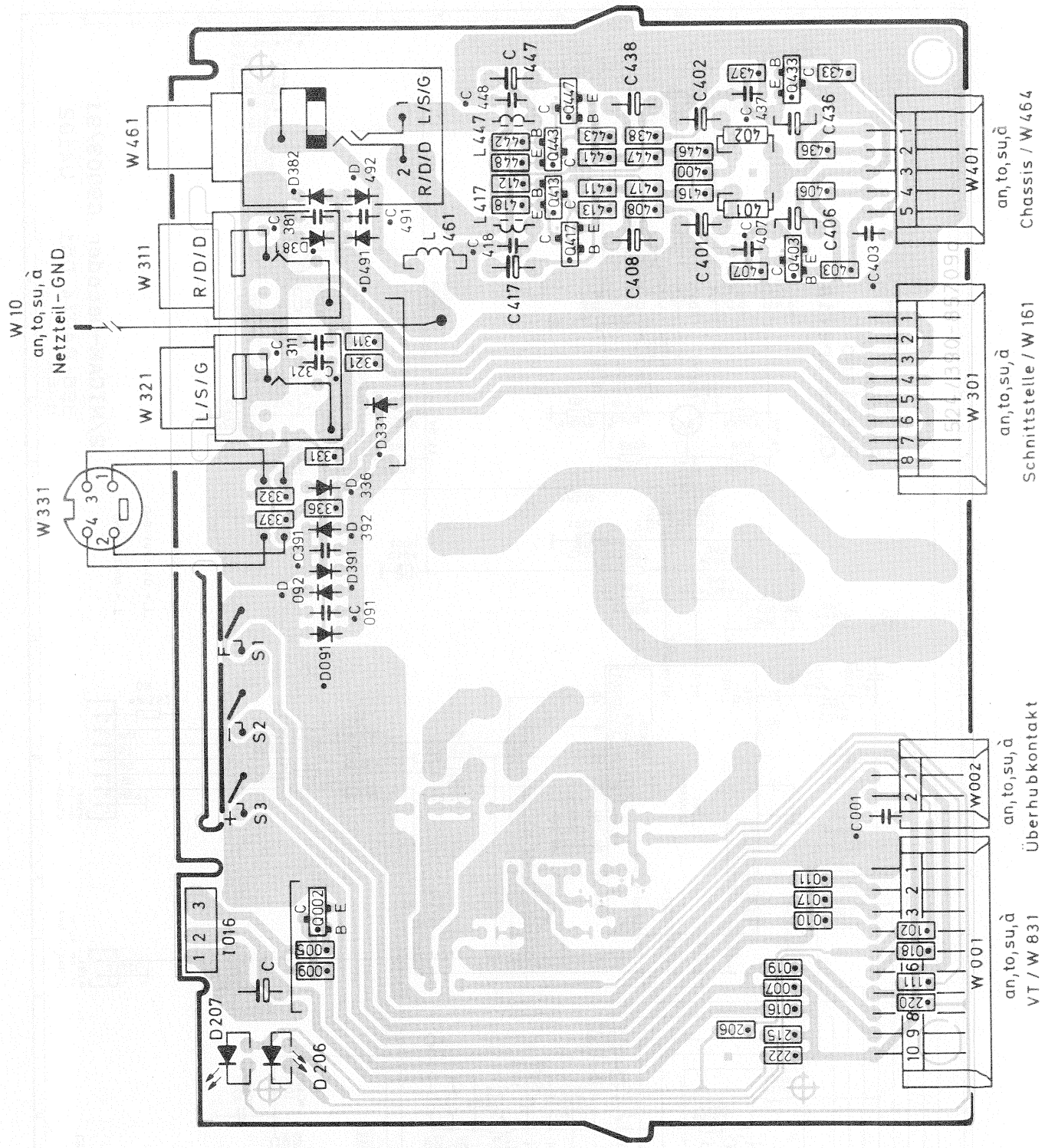


**Ltpl. Bedienteil 396-85709.050 Concept**
**Piastra di comando**
**Control board**
**Platine de commandes**
Lötseite · Lato saldature · Solder side · Côté soudure

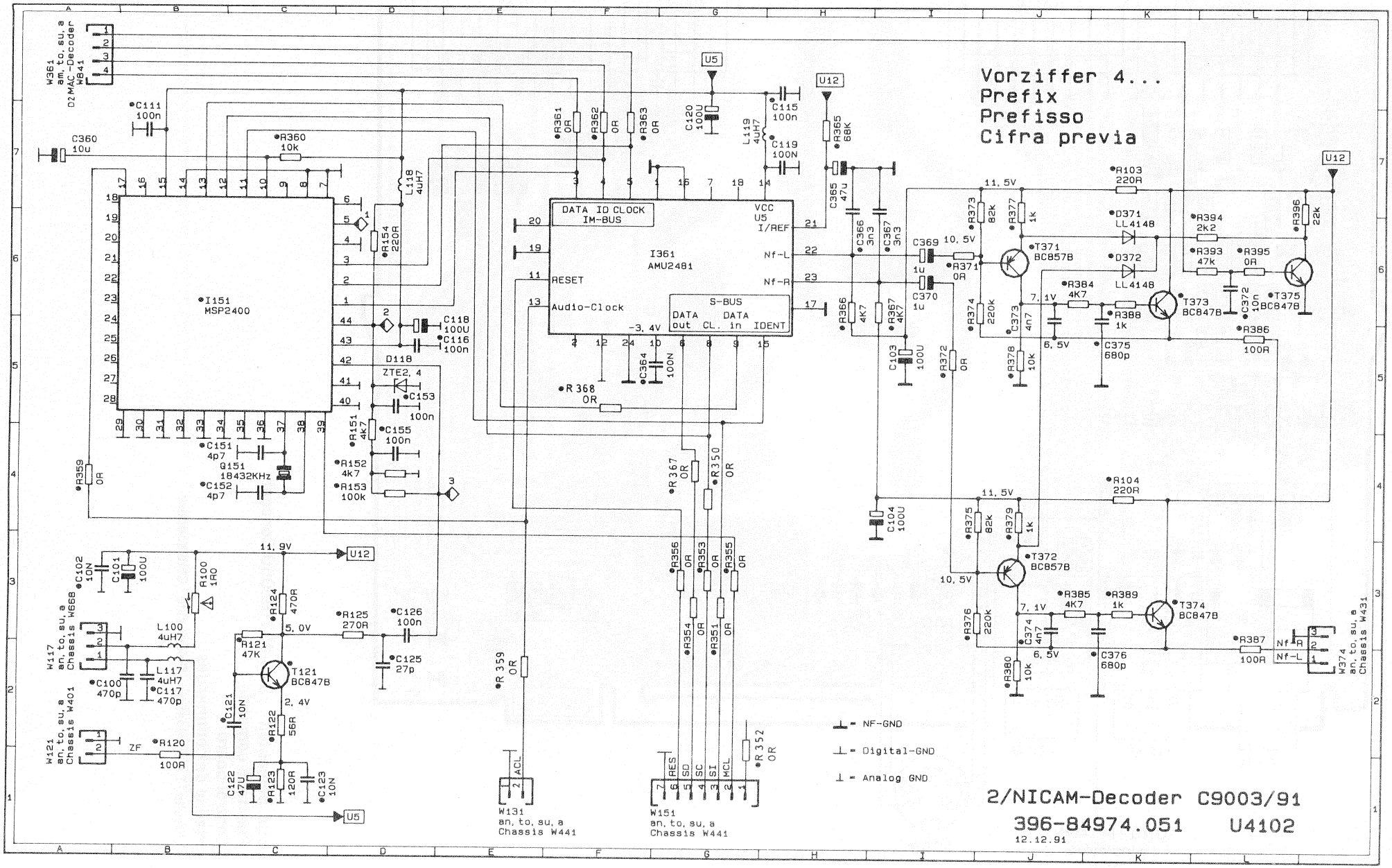
Vorziffer 4...
Prefix
Prefisso
Cifra previa
I151
MSP2400
I361
AMU2481
DATA ID CLOCK
IM-BUS
VCC
U5
I/REF
Nf-L
Nf-R
RESET
Audio-Clock
S-BUS
DATA out
DATA in
CL.
IDENT
-3, 4V
11, 5V
10, 5V
7, 1V
6, 5V
11, 9V
5, 0V
2, 4V
D118
ZTE2, 4
Q151
18432KHz
T371
BC857B
T372
BC857B
T373
BC847B
T374
BC847B
T375
BC847B
T121
BC847B
W361
an, to, su, a
D2MAC-Decoder
W841
W117
an, to, su, a
Chassis W668
W121
an, to, su, a
Chassis W401
W131
an, to, su, a
Chassis W441
W151
an, to, su, a
Chassis W441
W374
an, to, su, a
Chassis W431
= NF-GND
= Digital-GND
= Analog GND
2/NICAM-Decoder C9003/91
396-84974.051 U4102
12.12.91

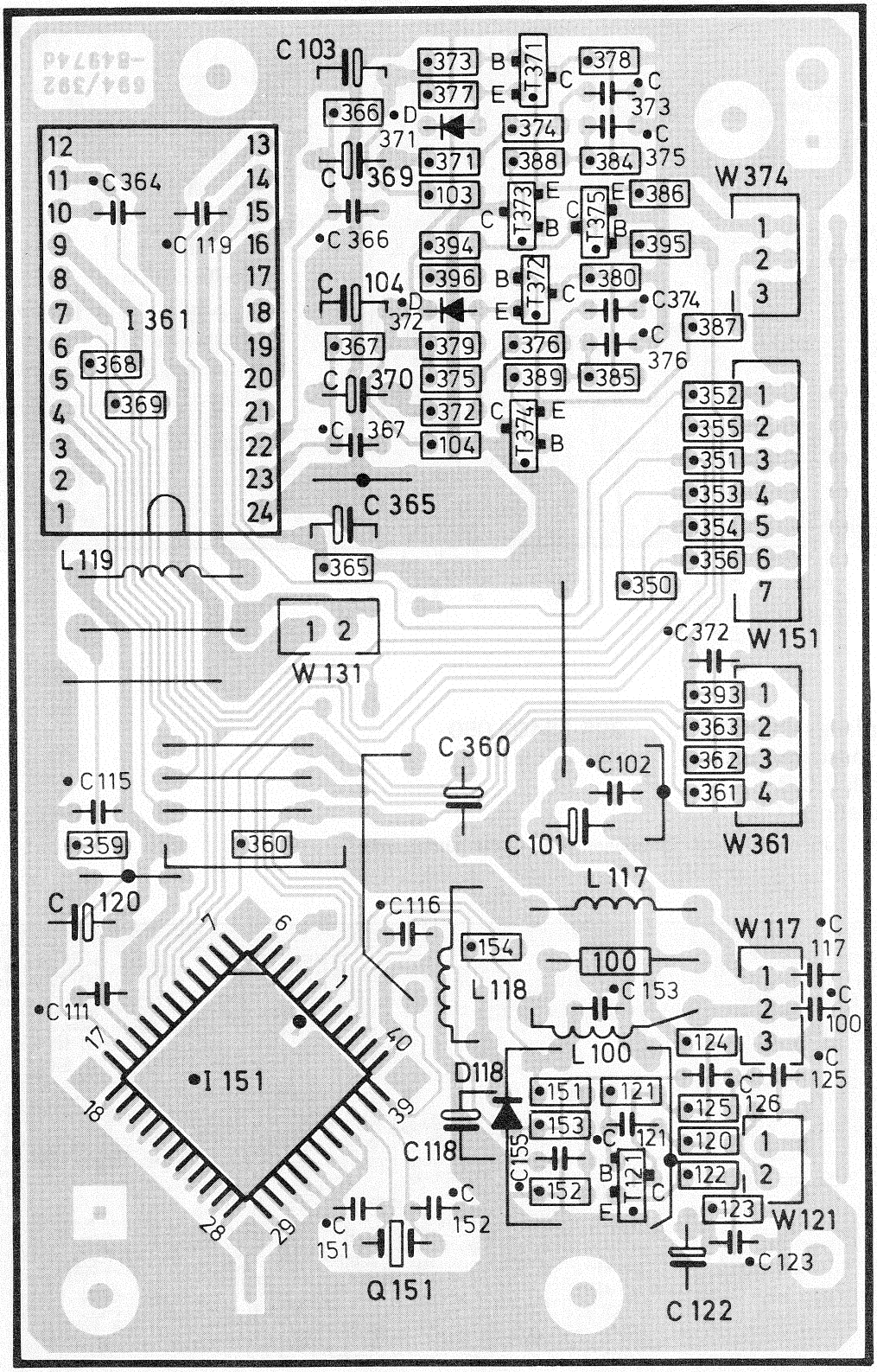


**Ltpl. NICAM - Decoder** **39684974.051**
**Piastra Decodificatore NICAM**
**NICAM Decoder P.C.B.**
**Platine Décodeur NICAM**

Lötseite - Lato saldature - Solder side - Côté soudure

Vorziffer 4...
Prefisso
Leading number
Indice

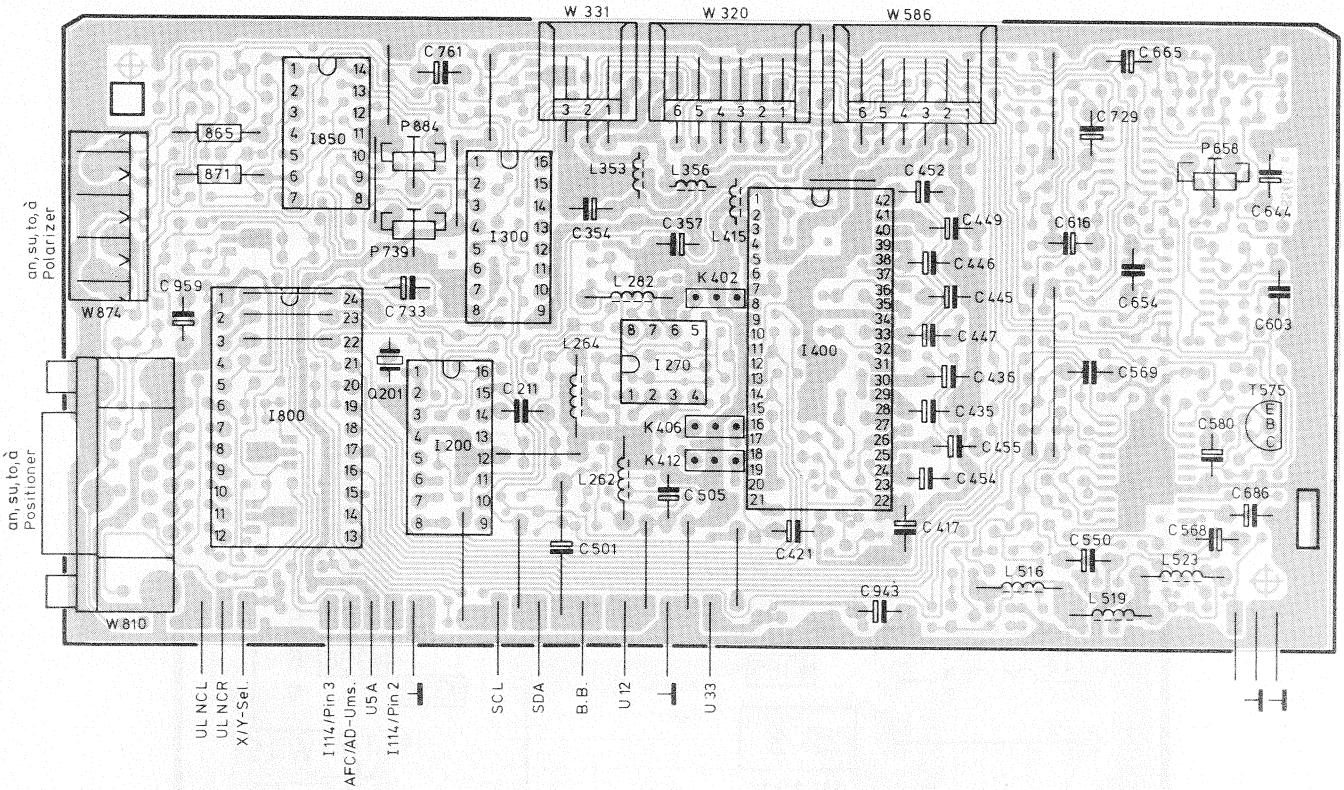


**Ltpl. SAT Empfangseinheit III** **396-85403.050**
**Piastra Predisposizione SAT III**
**SAT Receiver III P.C.B.**
**Platine Récepteur SAT III**

**Bestückungsseite - Lato componenti - Component side - Côté composants**

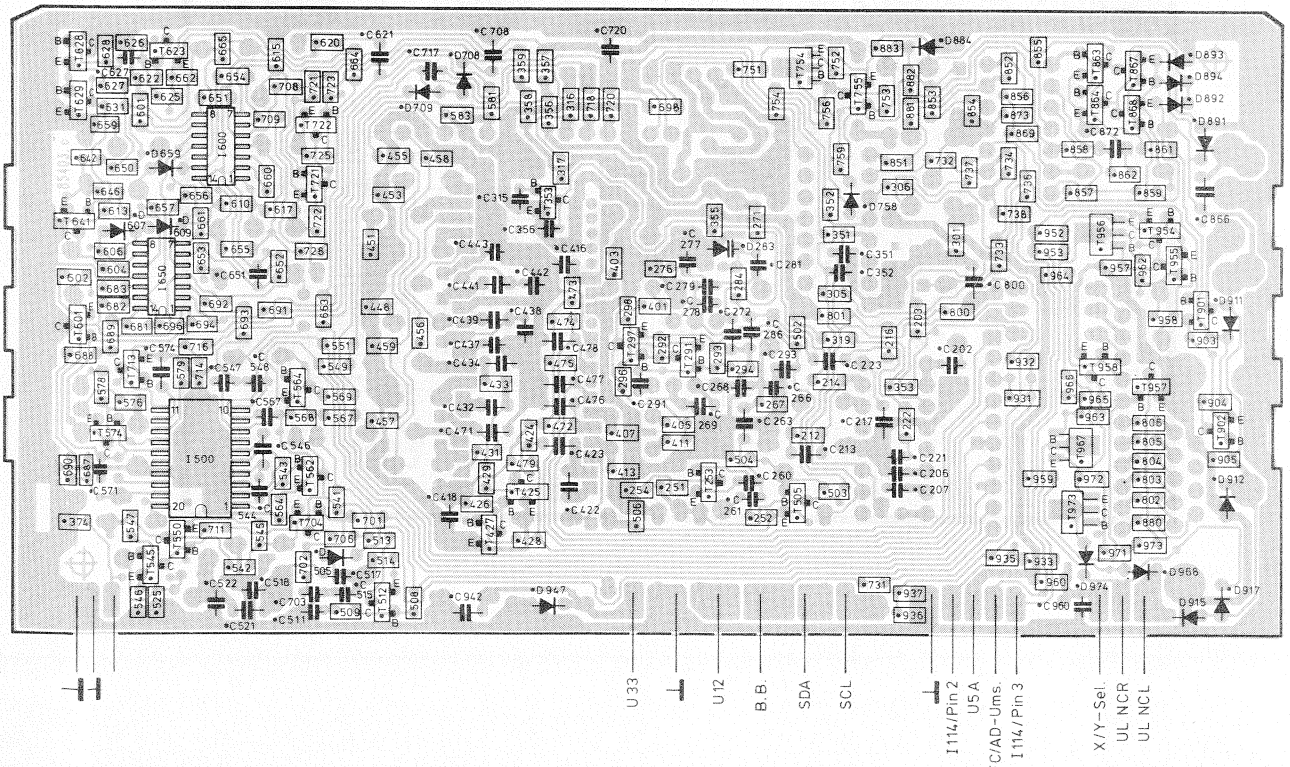


**Ltpl. SAT Empfangseinheit III** **396-85403.050**
**Piastra Predisposizione SAT III**
**SAT Receiver III P.C.B.**
**Platine Récepteur SAT III**

**Lötseite - Lato saldature - Solder side - Côté soudure**

an,su,to,à SVHS W171

an,su,to,à QVT-Dec. W852

an,su,to,à Chassis W606

an,su,to,à Polarizer

an,su,to,à Chassis W651

396-85403.050

| Benennung: | LOEWE. |
|---|---|
| SAT-Empfangseinheit III<br>Predisposizione-SAT<br>SAT-Receiver<br>Predisposicion-SAT | |
| Code-Teile-Nr.: 291-85442.101 | Index: C |
| | Schlüssel: U199 |

**SAT-Empfangseinheit III** **291-85442.101**
**Predisposizione SAT III**
**SAT Receiver III**
**Récepteur SAT III**

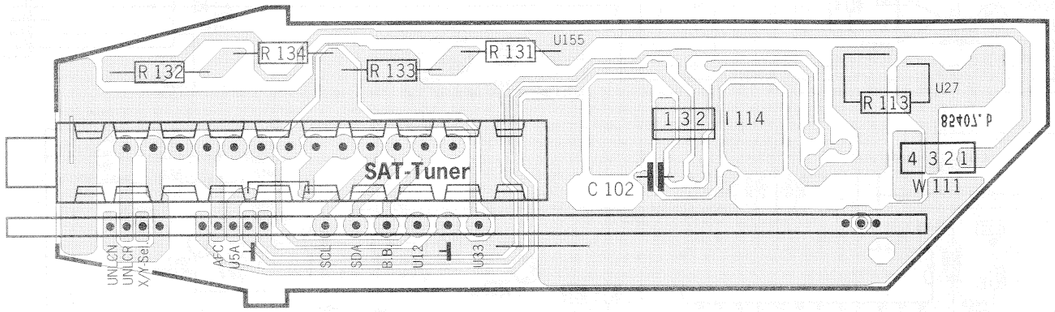


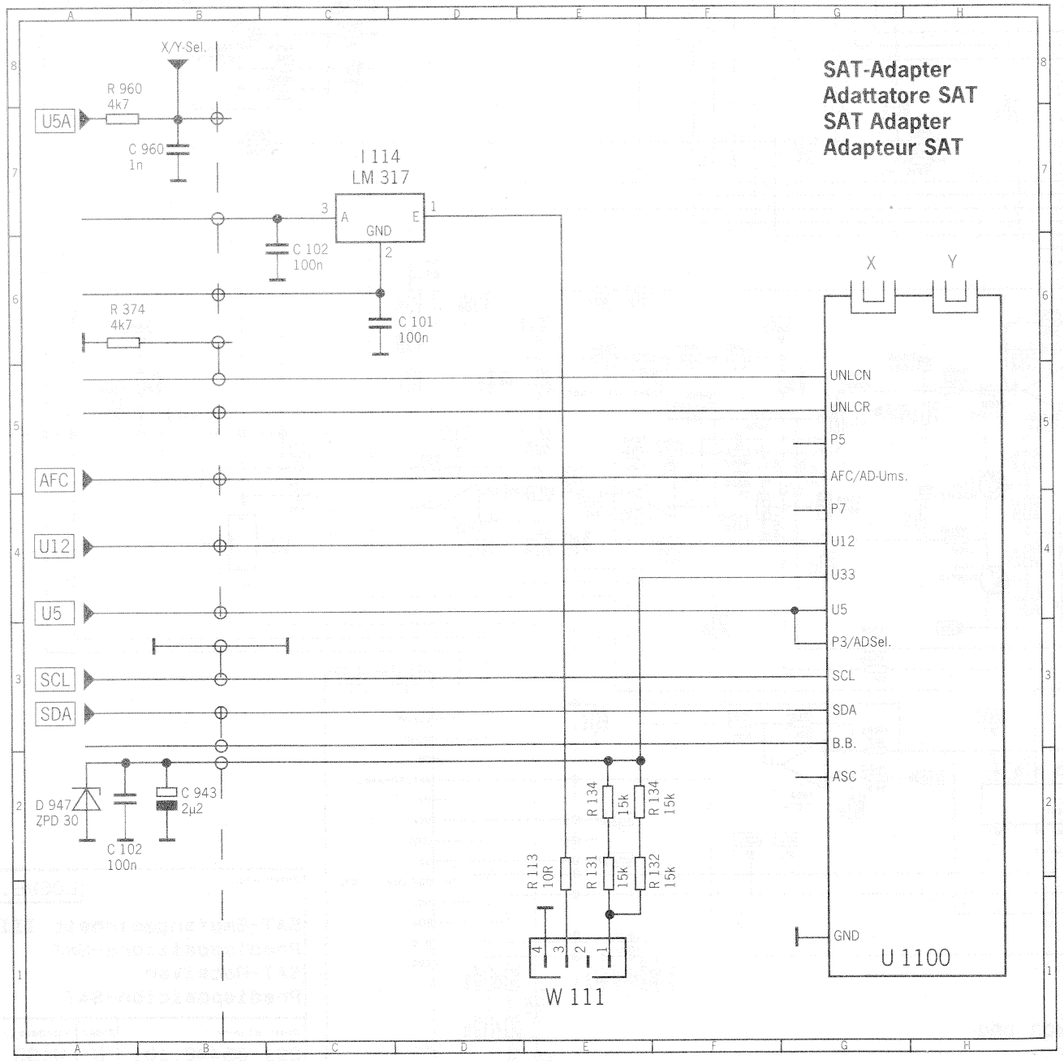




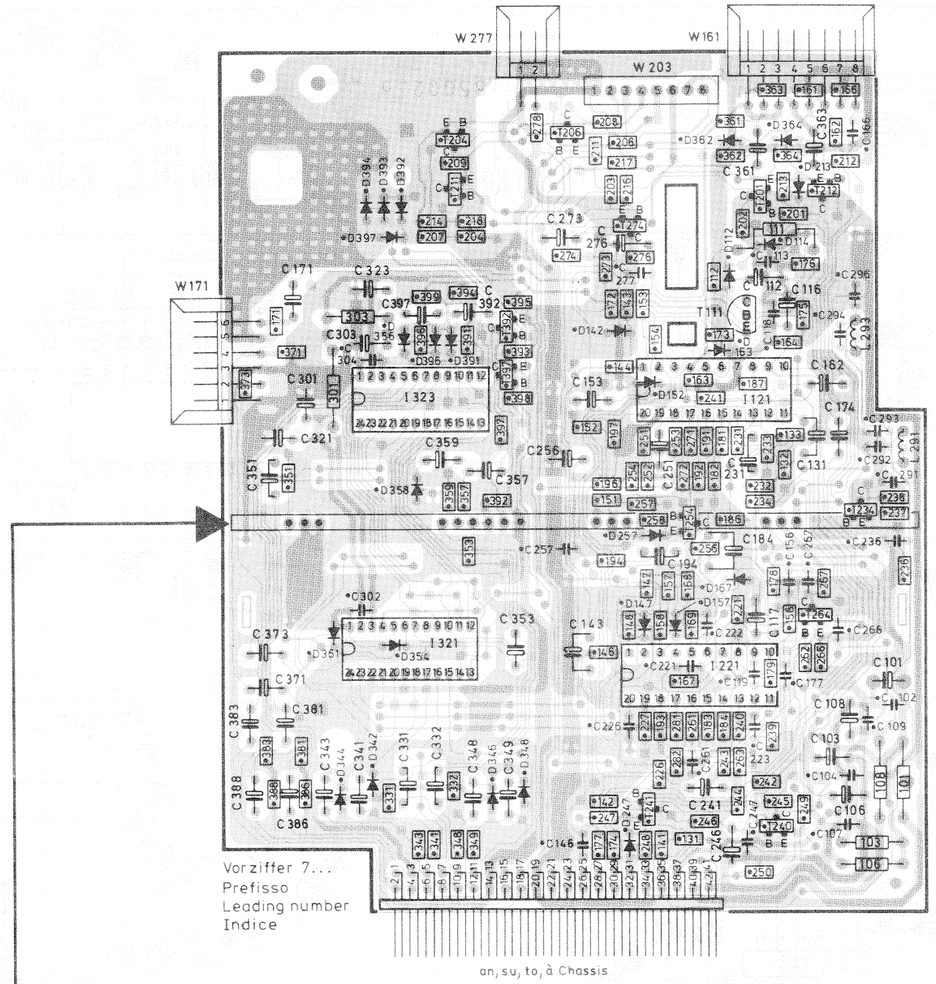


**Ltpl. S-VHS-Schnittstelle I** **396-85002.050**
**Piastra d'interfaccia S-VHS I**
**S-VHS Interface I P.C.B.**
**Platine d'interface S-VHS I**
**Lötseite - Lato saldature - Solder side - Côté soudure**

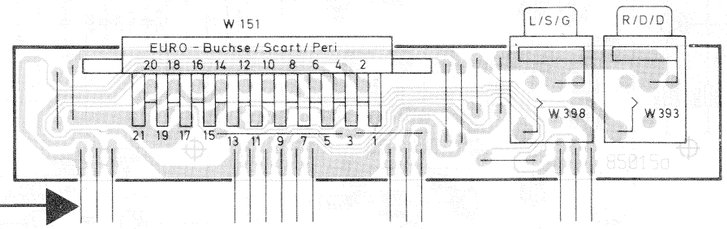


**Ltpl. S-VHS-Buchse** **396-85015.050**
**Piastra presa S-VHS**
**S-VHS socket P.C.B.**
**Platine prise S-VHS**
**Lötseite - Lato saldature - Solder side - Côté soudure**

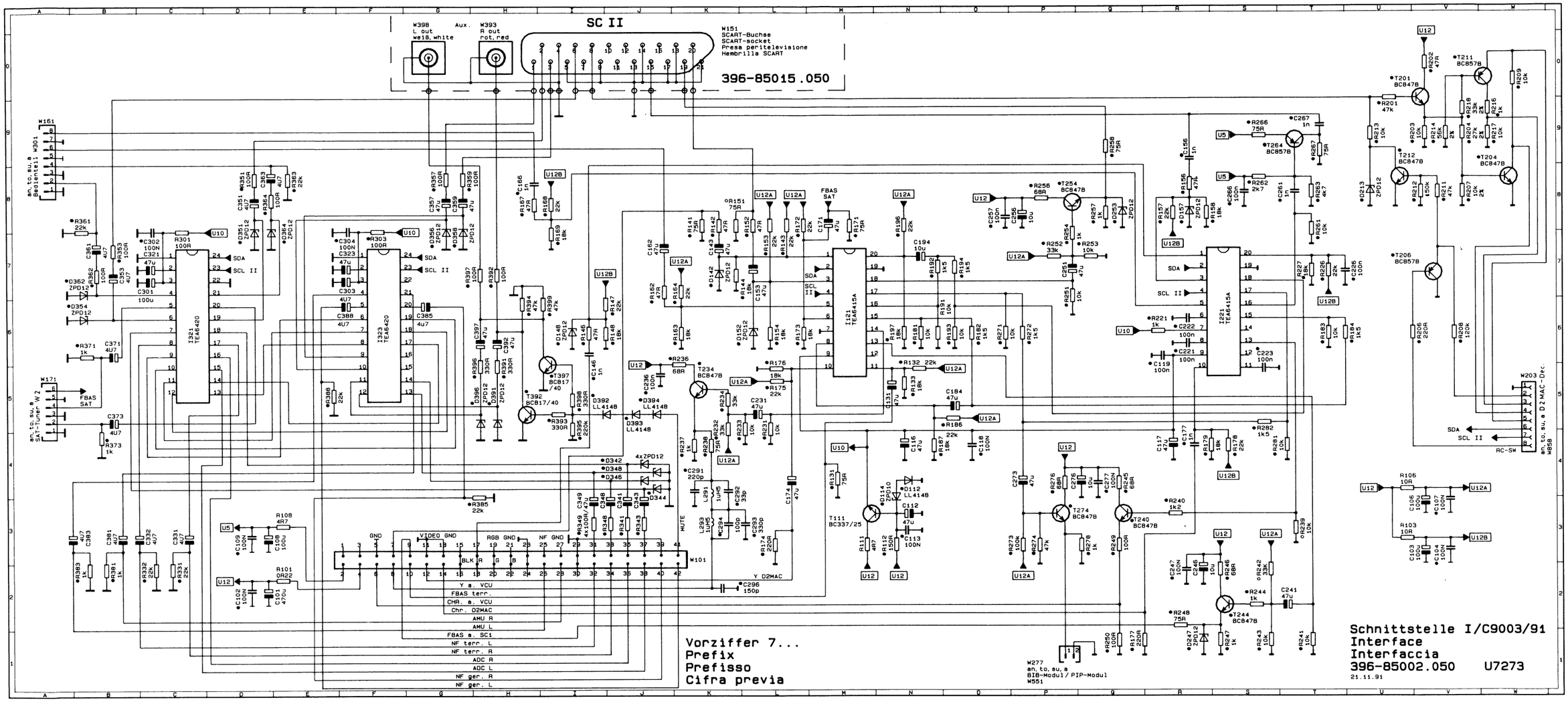
SC II
W398 Aux. W393
L out A out
we18, white rot, red
W151
SCART-Buchse
SCART-socket
Presa peritelevisione
Hembrilla SCART
396-85015.050
Vorziffer 7...
Prefix
Prefisso
Cifra previa
Schnittstelle I/C9003/91
Interface
Interfaccia
396-85002.050 U7273
21.11.91

# C 9003

| Geräteteype und Art.-Nr. / Modello e No. dell'art. | | | | | | | | | | | | Baugruppen | Componente | |
|---|---|---|---|---|---|---|---|---|---|---|---|---|---|---|
| | PROFIL 7000 52480.40 | PROFIL 7000 52480.22 | PROFIL 7000 52480 | PROFIL 6300 52483.40 | PROFIL 6300 52483.22 | PROFIL 6300 52483 | CONCEPT 7000 52431.40 | CONCEPT 7000 52431 | CONCEPT 6300 52430.40 | CONCEPT 6300 52430 | | | | |
| Chassis kpl. / Telaio cpl. | | | X | | | X | | | | | | Chassis 24/28" Standard B/G | Telaio 24/28" Standard B/G | 884-85030.134 |
| | X | | | X | | | | | | | | Chassis 24/28" Standard B/G; NICAM | Telaio 24/28" Standard B/G; NICAM | 884-85030.134 |
| | | X | | | X | | | | | | | Chassis 24/28" Standard B/G; SVHS (I); SAT (III) | Telaio 24/28" Standard B/G; SVHS (I); SAT (III) | 884-85030.135 |
| | | | | | | | | X | | X | | Chassis 24/28" S-VHS (I); Multistandard | Telaio 24/28" S-VHS; Multi Standard | 884-85030.136 |
| | | | | | | | X | | X | | | Chassis 24/28" S-VHS (I); NICAM; Multistandard | Telaio 24/28" S-VHS (I); NICAM; Multi Standard | 884-85030.136 |
| Chassis Baugruppen / Gruppi su telaio | | | | | | | X | X | X | X | | Tuner 8 MHz Multistandard | Tuner di iperbanda 8MHz Multi Standard | 260-85137.051 |
| | X | X | X | X | X | X | | | | | | Tuner 8 MHz Standard B/G | Tuner di iperbanda 8MHz Standard B/G | 260-85187.050 |
| | X | | X | X | | X | X | X | X | X | | VT-Decoder | Decodificatore Televideo | 396-85004.055 |
| | | X | | | X | | | | | | | VT-Decoder | Decodificatore Televideo | 396-85004.057 |
| | | X | | | X | | X | X | X | X | | S-VHS-Schnittstelle (I) | Piastra d'interfaccia S-VHS (I) | 396-85002.051 |
| | | X | | | X | | X | X | X | X | | S-VHS Buchse | Piastra presa S-VHS | 396-85015.050 |
| Geräte Baugruppen / Gruppi di apparecchi | | | | | | | | | X | X | | Bildröhre 24" A59 EAK 252 X 01 | Cinescopio 24" A59 EAK 252 X 01 | 345-22660 |
| | | | | X | X | X | | | | | | Bildröhre 24" A59 EAK 220 X 01 | Cinescopio 24" A59 EAK 220 X 01 | 345-20858 |
| | | | | | | | X | X | | | | Bildröhre 28" A66 EAK 252 X 01 | Cinescopio 28" A66 EAK 252 X 01 | 345-22670 |
| | X | X | X | | | | | | | | | Bildröhre 28" A66 EAK 220 X 01 | Cinescopio 28" A66 EAK 220 X 01 | 345-20857 |
| | X | X | X | X | X | X | X | X | X | X | | Bildrohrplatte 24/28" | Piastra cinescopio 24/28" | 396-83616.063 |
| | | | | | | | X | X | X | X | | Ltpl. Bedienung | Piastra comando | 396-85709.050 |
| | X | X | X | X | X | X | | | | | | Ltpl. Bedienung | Piastra comando | 396-85841.050 |
| | | | | | | | X | | X | | | NICAM-Decoder | Decodificatore NICAM | 291-85024.002 |
| | | | | | | | X | | X | | | Ltpl. NICAM-Decoder | Piastra decodificatore NICAM | 396-84974.052 |
| | | X | | | X | | | | | | | SAT-Einheit (III), kompl. | Unitá SAT (III), compl. | 291-85442.101 |
| | X | X | X | X | X | X | X | X | X | X | | IR-Geber FB 300 | Telecomando infrarosso FB 300 | 263-85000.050 |





# C 9003

| Set type and Art. No. / Typ d'app. et No. d'art. | | | | | | | | | | | | Components | Composants | |
|---|---|---|---|---|---|---|---|---|---|---|---|---|---|---|
| | PROFIL 7000 52480.40 | PROFIL 7000 52480.22 | PROFIL 7000 52480 | PROFIL 6300 52483.40 | PROFIL 6300 52483.22 | PROFIL 6300 52483 | CONCEPT 7000 52431.40 | CONCEPT 7000 52431 | CONCEPT 6300 52430.40 | CONCEPT 6300 52430 | | | | |
| Chassis cpl. / Châssis cpl. | | | X | | | X | | | | | | Chassis 24/28" Standard B/G | Châssis 24/28" Standard B/G | 884-85030.134 |
| | X | | | X | | | | | | | | Chassis 24/28" Standard B/G; NICAM | Châssis 24/28" Standard B/G; NICAM | 884-85030.134 |
| | | X | | | X | | | | | | | Chassis 24/28" Standard B/G; SVHS (I); SAT (III) | Châssis 24/28" Standard B/G; SVHS (I); SAT (III) | 884-85030.135 |
| | | | | | | | | X | | X | | Chassis 24/28" S-VHS (I); Multi Standard | Châssis 24/28" S-VHS; Multi Standard | 884-85030.136 |
| | | | | | | | X | | X | | | Chassis 24/28" S-VHS (I); NICAM; Multi Standard | Châssis 24/28" S-VHS (I); NICAM; Multi Standard | 884-85030.136 |
| Chassis Components / Module de Châssis | | | | | | | X | X | X | X | | Tuner 8 MHz Multi Standard | Tuner 8MHz Multi Standard | 260-85137.051 |
| | X | X | X | X | X | X | | | | | | Tuner 8 MHz Standard B/G | Tuner 8MHz Standard B/G | 260-85187.050 |
| | X | | X | X | | X | X | X | X | X | | Teletext Decoder | Décodeur Télétexte | 396-85004.055 |
| | | X | | | X | | | | | | | Teletext Decoder | Décodeur Télétexte | 396-85004.057 |
| | | X | | | X | | X | X | X | X | | S-VHS Interface P.C.B (I) | Platine d'interface S-VHS (I) | 396-85002.051 |
| | | X | | | X | | X | X | X | X | | S-VHS Socket P.C.B | Platine prise S-VHS | 396-85015.050 |
| Set components / Module d'appareils | | | | | | | | | X | X | | Picture tube 24" A59 EAK 252 X 01 | Tube image 24" A59 EAK 252 X 01 | 345-22660 |
| | | | | X | X | X | | | | | | Picture tube 24" A59 EAK 220 X 01 | Tube image 24" A59 EAK 220 X 01 | 345-20858 |
| | | | | | | | X | X | | | | Picture tube 28" A66 EAK 252 X 01 | Tube image 28" A66 EAK 252 X 01 | 345-22670 |
| | X | X | X | | | | | | | | | Picture tube 28" A66 EAK 220 X 01 | Tube image 28" A66 EAK 220 X 01 | 345-20857 |
| | X | X | X | X | X | X | X | X | X | X | | Picture tube P.C.B 24/28" | Platine tube image 24/28" | 396-83616.063 |
| | | | | | | | X | X | X | X | | Control P.C.B | Platine commande | 396-85709.050 |
| | X | X | X | X | X | X | | | | | | Control P.C.B | Platine commande | 396-85841.050 |
| | | | | | | | X | | X | | | NICAM Decoder | Décodeur NICAM | 291-85024.002 |
| | | | | | | | X | | X | | | NICAM Decoder P.C.B | Platine Décodeur NICAM | 396-84974.052 |
| | | X | | | X | | | | | | | SAT unit (III), cpl. | Bloc de SAT (III), cpl. | 291-85442.101 |
| | X | X | X | X | X | X | X | X | X | X | | Remote control FB 300 | Télécommande à infrarouge FB 300 | 263-85000.050 |

## ARTIKEL: 52483 — PROFIL 6300

| POS.NR. ITEM NMB. | BESTELL-BEZEICHNUNG | DESCRIPTION | BESTELL-NUMMER LIST PART NMB. |
|---|---|---|---|
| | **BAUGRUPPEN** | **UNITS** | |
| U 1100 | HYPERBAND-TUNER KPL. 8MHZ/STAND-BG/C9003 | TUNER | 260-85187.050T |
| U 3371 | BILDROHRPLATTE C9003 21/28" | CRT BOARD | 396-83616.063 |
| U 7811 | VT-DECODER C9003 MIT KONTAKTLEISTEN | TELETEXT DECODER P.C.B | 396-85004.055T |
| U 8211 | BEDIENPLATTE C9003 | CONTROL PLATE | 396-85841.050 |
| | **TRANSISTOREN** | **TRANSISTORS** | |
| | BF 869 | | 346-18902 |
| | BC 557 B | | 346-74878 |
| | BC 547 C | | 346-79589 |
| | BUZ 71AF1 | | 346-18528 |
| | BC 639 | | 346-75622 |
| | BC 547 B | | 346-74983 |
| T 0526 | BD 139/16 M.FER.PERLE | | 346-15826.050 |
| T 0534 | S 2000 AF | | 346-16204 |
| T 0593 | BC 546 B | | 346-74968 |
| T 0594 | BD 537 | | 346-77764 |
| T 0624 | S 2000 AF | | 346-16203 |
| | **INTEGR. SCHALTUNGEN** | **INTEGRATED CIRCUITS** | |
| I 0211 | X27C16P PROG.F407 | | 349-90535.407 |
| I 0311 | TEA 2124 | | 349-19865 |
| I 0321 | VCU 2136-19/23/39/46 | | 349-18444 |
| I 0351 | ACVP 2205-25/26 | | 349-21121 |
| I 0361 | DTI 2223-14 | | 349-18371 |
| I 0371 | MCU 2600-56 | | 349-15714 |
| I 0401 | 78 L 05 ACP | | 349-15209 |
| I 0421 | ADC 2311-17/26 | | 349-18639 |
| I 0441 | APU 2471-05/13/31 | | 349-18227 |
| I 0474 | TDA 2030 A | | 349-15866 |
| I 0484 | TDA 2030 A | | 349-15866 |
| I 0511 | DPU 2553-25 | | 349-21374 |
| I 0561 | TDA 8175 | | 349-15721 |
| I 0611 | TDA 4600-2/TDA 4601 | | 349-10055 |
| I 0666 | TL 431 CLP | | 349-18230.020 |
| I 0676 | TL 431 CLP | | 349-18230.020 |
| I 0681 | 78 L 05 ACP | | 349-15209 |
| I 7811 | TPU 2735-23/37 | | 349-18860 |
| I 7821 | 41256-15 | | 349-14819 |
| I 7836 | 27PC512 PROG.C-V1.14 | | 349-20100.058 |
| I 8016 | TFMS 5360 | | 291-22155 |
| | **DIODEN** | **DIODES** | |
| | RGP 10 | | 352-18460 |
| | BA 157 | | 352-44799 |
| | ZPD 12 | | 352-44202 |
| | 1 N 4148 | | 352-31818 |

| POS.NR. ITEM NMB. | ARTIKEL: 52483 BESTELL-BEZEICHNUNG | PROFIL 6300 DESCRIPTION | BESTELL-NUMMER LIST PART NMB. |
|---|---|---|---|
| | **DIODEN** | **DIODES** | |
| | BY 398 | | 352-11109 |
| | PLR 817 | | 352-79586 |
| | BYW 96-D | | 352-21059 |
| D 0206 | ZPD 30 G | | 352-15763 |
| D 0211 | BZX 79 B 5 V6 | | 352-11683 |
| D 0292 | BZX 79 C 9 V1 | | 352-76387 |
| D 0329 | ZPD 5,1 | | 352-13139 |
| D 0536 | BY 228 | | 352-10834 |
| D 0543 | BY 269 | | 352-18692 |
| D 0561 | 1 N 4001 | | 352-47247 |
| D 0613 | B 380 C1500 SKB | | 354-12667 |
| D 0624 | 1 N 4007 | | 352-79585 |
| D 0661 | BYW 98-100 C1 STM | | 352-20535 |
| D 0671 | BYS 26/45 | | 352-12657 |
| D 8206 | TLHR 4400 ROT | | 353-17887 |
| D 8207 | TLHG 4400 GRÜN | | 353-17888 |
| | **SPULEN/LAUTSPRECHER** | **COILS/SPEAKERS** | |
| | LAUTSPR. 8 . 3,5W | LOUDSPEAKER | 272-81731 |
| | LAUTSPRECHER | LOUDSPEAKER | 272-84387 |
| L 0528 | TREIBERSPULE | COIL | 297-12134 |
| L 0531 | Z-TRAFO VORM. | LINE TRANSFORMER | 276-20130.050 |
| L 0541 | LIN-REGLER | LINEARITY REGULATOR | 278-20366 |
| L 0639 | WANDLERTRAFO KPL. | TRANSDUCER TRANSFOR. | 490-19994 |
| L 6001 | ENTMAG.SPULE | DEMAGNETIZING COIL | 297-83150.002 |
| | **QUARZE** | **QUARTZES** | |
| Q 0374 | 17,73448 MHZ | | 385-15726 |
| Q 7833 | 4,0 MHZ | | 385-18331 |
| | **BUCHSEN/FASSUNGEN** | **SOCKETS** | |
| | BILDROHRFASSUNG | PICTURE TUBE SOCKET | 320-16428 |
| | IC-FASSUNG 32-POL. | SOCKET | 320-22087 |
| | IC-FASSUNG 24-POL. | SOCKET | 320-80469 |
| | IC-FASSUNG 40-POL. | SOCKET | 320-80502 |
| | IC-FASSUNG 8-POL. | SOCKET | 320-80503 |
| | SICHERUNGSHALTEFEDER F. S 611 | FUSE HOLDER SPRING | 730-21447 |
| W 0323 | SCART-BUCHSE 21-POL. | SOCKET | 323-11799 |
| W 0479 | LAUTSPRECHERBUCHSE | SPEAKER SOCKET | 323-49752 |
| W 0489 | LAUTSPRECHERBUCHSE | SPEAKER SOCKET | 323-49752 |
| W 8461 | KOPFHÖRERBUCHSE (KLINKE) | HEADPHONE SOCKET | 323-15966 |
| | **SCHALTER** | **SWITCHES** | |
| S 8001 | TASTER F‹R C, - + | SWITCH | 467-17895 |
| S 8002 | TASTER F‹R C, - + | SWITCH | 467-17895 |
| S 8003 | TASTER F‹R C, - + | SWITCH | 467-17895 |

## ARTIKEL: 52483 — PROFIL 6300

| POS.NR. ITEM NMB. | BESTELL-BEZEICHNUNG | DESCRIPTION | BESTELL-NUMMER LIST PART NMB. |
|---|---|---|---|
| | **SCHALTER** | **SWITCHES** | |
| S 8101 | NETZSCHALTER | POWER SWITCH | 471-84423 |
| | **POTENTIOMETER** | **POTENTIOMETERS** | |
| P 0311 | 100R | | 375-18867 |
| P 0362 | 2M2 | | 375-17337 |
| P 0368 | 22K | | 375-15659 |
| P 0388 | 2K2 | | 375-15652 |
| P 0413 | 10K | | 375-20098 |
| P 0633 | 4K7 | | 375-15658 |
| | **WIDERSTÄNDE** | **RESISTORS** | |
| R 0206 | 22K J | | 367-19671 |
| R 0211 | 39R J 0207 | | 367-18358 |
| R 0326 | 39R J 0207 | | 367-18358 |
| R 0327 | 39R J 0207 | | 367-18358 |
| R 0328 | 39R J 0207 | | 367-18358 |
| R 0363 | 820R K 0411 | | 365-77681 |
| R 0364 | 1K5 K 0411 | | 365-77586 |
| R 0366 | 100R J 0309 | | 366-17757 |
| R 0375 | 18K G 0207 | | 367-11559 |
| R 0376 | 560R J 0207 | | 366-80643 |
| R 0378 | 820R K 0411 | | 365-77681 |
| R 0379 | 10K G 0207 | | 367-17551 |
| R 0385 | 18K G 0207 | | 367-11559 |
| R 0386 | 560R J 0207 | | 366-80643 |
| R 0388 | 820R K 0411 | | 365-77681 |
| R 0389 | 10K G 0207 | | 367-17551 |
| R 0395 | 18K G 0207 | | 367-11559 |
| R 0396 | 560R J 0207 | | 366-80643 |
| R 0398 | 820R K 0411 | | 365-77681 |
| R 0399 | 10K G 0207 | | 367-17551 |
| R 0403 | 10R K 0207 | | 366-74368 |
| R 0466 | 330R K 4 W | | 368-18246 |
| R 0468 | 330R K 4 W | | 368-18246 |
| R 0491 | 10R J 0207 | | 367-18080 |
| R 0516 | 1K F 0204 | | 367-17134 |
| R 0521 | 3R3 K 0207 | | 366-11790 |
| R 0522 | 100R F 0204 | | 367-15082 |
| R 0524 | 150R G 0207 | | 367-18079 |
| R 0528 | 68R K 4 W | | 368-10945 |
| R 0531 | 10R K 9W | | 368-18616 |
| R 0532 | 1R5 K 4 W | | 368-17204 |
| R 0542 | 10K J 4 W | | 368-14686 |
| R 0544 | 390K K 0411 | | 365-47678.021 |
| R 0546 | 130K F 0204 | | 367-16961 |
| R 0547 | 4R7 J 0,5 W | | 368-10946 |
| R 0557 | 0R22 K 0309 | | 366-79506 |
| R 0561 | 1R5 K 0309 | | 366-17899 |
| R 0566 | 4K7 F 0204 | | 367-17190 |
| R 0571 | 560R G 0207 | | 367-20349 |
| R 0572 | 1K8 F 0204 | | 367-12201 |

| | ARTIKEL: 52483 | PROFIL 6300 | |
|---|---|---|---|
| POS.NR.<br>ITEM NMB. | BESTELL-BEZEICHNUNG | DESCRIPTION | BESTELL-NUMMER<br>LIST PART NMB. |
| | **WIDERSTÄNDE** | **RESISTORS** | |
| R 0573 | 1K8 F 0204 | | 367-12201 |
| R 0574 | 0R82 K 4 W | | 368-11091 |
| R 0576 | 22K F 0204 | | 367-11588 |
| R 0577 | 13K G 0207 | | 367-16240 |
| R 0578 | 68R G 0204 | | 367-15705 |
| R 0579 | 8K2 G 0204 | | 367-15707 |
| R 0583 | 100R F 0204 | | 367-15082 |
| R 0584 | 2K2 J 0204 | | 367-14878 |
| R 0586 | 10K F 0204 | | 367-16485 |
| R 0587 | 3K9 J 0204 | | 367-15708 |
| R 0588 | 8K2 G 0204 | | 367-15707 |
| R 0589 | 100K F 0204 | | 367-17812 |
| R 0591 | 3K3 F 0204 | | 367-14897 |
| R 0592 | 1K5 F 0204 | | 367-11503 |
| R 0593 | 5K6 J 0204 | | 367-14884 |
| R 0613 | 1R K 4 W | | 368-79913 |
| R 0619 | DUO PTC | | 372-73056 |
| R 0621 | 2K7 J 0617 | | 367-12723 |
| R 0622 | 4K M PTC | | 372-13349 |
| R 0627 | 270K G 0207 | | 367-15823 |
| R 0632 | 1K2 F 0204 | | 367-16202 |
| R 0633 | 12K G 0207 | | 367-16394 |
| R 0637 | 47R K 3 W | | 368-14191 |
| R 0639 | 10M J 0411 | | 367-19664 |
| R 0668 | 18K F 0204 | | 367-18527 |
| R 0669 | 4K7 F 0204 | | 367-17190 |
| R 0677 | 10K F 0204 | | 367-16485 |
| R 0678 | 10K F 0204 | | 367-16485 |
| R 0681 | 33R J 0309 | | 366-20128 |
| R 0686 | 0R1 K 0207 | | 366-10905 |
| R 0687 | 0R1 K 0207 | | 366-10905 |
| R 0688 | 3R3 K 17 W | | 368-47941 |
| R 8401 | 22R J 0207 | | 366-79915 |
| R 8402 | 22R J 0207 | | 366-79915 |
| | **KONDENSATOREN** | **CAPACITORS** | |
| | 100P 63 V | | 357-42786 |
| | 47P 63 V | | 357-46102 |
| | 2U2 50V BP | | 360-11167 |
| | 56P 63 V | | 357-48654 |
| | 180P 63 V | | 357-11345 |
| | 1000U 40V | | 360-80167 |
| | 1U 50V | | 359-10095.020 |
| | 1U 50 V | | 360-80618 |
| | 22P 63 V | | 357-50756 |
| | 2200U 35V | | 360-77756 |
| C 0312 | 10U 16V BP | | 360-13810.020 |
| C 0314 | 4U7 16V BP | | 360-79039 |
| C 0316 | 27P 63 V | | 357-49571 |
| C 0362 | 22N 2000 V | | 357-22266 |
| C 0386 | 4N7 63V | | 359-12177 |
| C 0536 | 10N 3,5% 1,5KV | | 359-80747 |

## ARTIKEL: 52483 PROFIL 6300

| POS.NR. ITEM NMB. | BESTELL-BEZEICHNUNG | DESCRIPTION | BESTELL-NUMMER LIST PART NMB. |
|---|---|---|---|
| | **KONDENSATOREN** | **CAPACITORS** | |
| C 0537 | 22N 400V | 359-14119 | |
| C 0539 | 1N5 1600 V | | 359-19973 |
| C 0544 | 1N5 20% 2 KV | | 359-18719 |
| C 0558 | 2200U 40V | | 360-18117 |
| C 0612 | 220N 250VW | | 359-77769 |
| C 0613 | 150N 250VW | | 359-11322 |
| C 0619 | 100N 250VW | | 359-71061 |
| C 0626 | 2N2 1000V | | 359-11894 |
| C 0634 | 1U 63V | | 360-75974 |
| C 0639 | 3N3 400 VW | | 357-12003 |
| C 0650 | 1N 1 KV | | 357-73102 |
| C 0672 | 2200U 25V | | 360-15762 |
| | **SICHERUNGEN** | **FUSES** | |
| S 0611 | 2,5 A 250V 5X20 | | 380-45568 |
| S 0656 | 1,25 A 250V | | 380-17123.020 |
| S 0661 | 2,0 A 250V 8X8 | | 380-16779.020 |
| S 0671 | 6,3 A 250V 8X8 | | 380-15727.020 |
| | **VERBINDUNGSLEITUNG** | **CONNECTING CABLES** | |
| | NETZKABEL SCHWARZ 2250 MM LG. | POWER CORD | 170-73310.070 |
| | NETZKABEL WEISS 2250 MM LG. | POWER CORD | 170-73310.072 |
| | **GEHÄUSETEILE** | **CABINET MOUNTING** | |
| | EINLAGE FÜR ZIERGITTER | INSERT | 411-85645.001 |
| | EINLAGE BEIGE | INSERT | 411-85645.002 |
| | SCHRAUBE 7X40 VZKT. F. BILDROHRBEFESTIG. | SCREW | 440-18058 |
| | DISTANZSTÜCK F. BILDROHRBEFESTG. | SPACER PIECE | 503-17983 |
| | TRÄGER/BEDIENUNG | SUPPORTER | 541-85468.011 |
| | VERSCHLUSS-STÜCK F. RÜCKWANDHALTER | FASTENER PIECE | 575-83567.001 |
| | VERSCHLUSS-BOLZEN F. RÜCKWAND | FASTENER BOLT | 576-83568.001 |
| | CHASSISHALTER LINKS | CHASSIS HOLDER | 602-81481.001 |
| | CHASSISHALTER RE. | CHASSIS HOLDER | 602-81482.021 |
| | ABDECKUNG | COVER | 703-85569.002 |
| | ABDECKUNG WEISS | COVER | 703-85569.004 |
| | KLAPPE/BEDIENUNG | DOOR ASSY. | 706-85469.001 |
| | ZIERGITTER SCHWARZ | ORNAMENTAL GRILLE | 708-85466.003 |
| | ZIERGITTER WEISS | ORNAMENTAL GRILLE | 708-85466.004 |
| | FFS-GEHÄUSE VORM. SCHWARZ 24" | CABINET | 750-90248.910 |
| | FFS-GEHÄUSE VORM. WEISS 24" | CABINET | 750-90248.940 |

| POS.NR. ITEM NMB. | ARTIKEL: 52483 BESTELL-BEZEICHNUNG | PROFIL 6300 DESCRIPTION | BESTELL-NUMMER LIST PART NMB. |
|---|---|---|---|
| | **GEHÄUSETEILE** | **CABINET MOUNTING** | |
| | RÜCKWAND SCHWARZ | REAR PANEL | 775-85465.011 |
| | RÜCKWAND WEISS | REAR PANEL | 775-85465.014 |
| | GEHÄUSEFUSS | CABINET FOOT | 783-82251.008 |
| | GEHÄUSEFUSS | CABINET FOOT | 783-82251.009 |
| | BILDRÖHRE „PH“ A59-EAK220X01 | PICTURE TUBE | 345-20858 |
| | **KNÖPFE** | **BUTTONS** | |
| | KNOPF/TASTER SCHWARZ | BUTTON | 682-85462.001 |
| | KNOPF/NETZSCHALTER | BUTTON | 682-85471.001 |
| | **ALLGEM. MECH. TEILE** | **COMMON MECHANICAL PARTS** | |
| | GLIMMERSCHEIBE 21X11 | MICA WASHER | 421-10881 |
| | KABELKLEMMHALTER M.STECKFUSS | CABLE SUPPORT | 530-81707.001 |
| | WIDERSTANDSHALTER | RESISTOR HOLDER | 602-19586 |
| | WIDERSTANDSHALTER | RESISTOR HOLDER | 602-23398.111 |
| | HALTER FÜR DIODE | HOLDER | 602-84535.011 |
| | ABDECKUNG,NETZ OBEN AM CHASSIS SEITLICH | COVER | 703-83527.011 |
| | ABDECKUNG/TUNERBUCHSE | COVER | 703-83529.011 |
| | MONTAGECLIP 6MM F.I561,T534,I611 | CLAMP CLIPS | 739-10230 |
| | MONTAGECLIP 3MM F.T663,D671,T534 | CLAMP CLIPS | 739-82691.001 |
| | **DRUCKSACHEN** | **OPERATING INSTRUCTIONS** | |
| | SERV.KURZANLTG.C9003 M.NEUEN BEDIENTEILEN | SERVICE INSTRUCTIONS | 230-22601 |
| | SERVICEANLEITUNG CONC.+PROF.6300/7000 | SERVICE INSTRUCTIONS | 230-90248.950 |
| | BED.KURZANLEITUNG -D/GB/I/F- C9003 | OPERATING INSTRUCT. | 233-20147.001 |
| | BED. ANLTG. -D-GB-I-F-C9003 PROFIL 7000/6300 | OPERATING INSTRUCT. | 233-22502 |
| | **GERÄTEBEIPACK** | **SET SUPPLEMENTS** | |
| ⊣▮⊢ | MIKROZELLE 1,5V IEC LR 03 | BATTERY | 280-13411.001 |
| | ANTENNENKABEL 1800 LG.SCHWARZ | ANTENNA CABLE | 169-84674.001 |
| U 9111 | IR-GEBER KPL. FB 300 LOEWE. | TRANSMITTER | 263-85000.050 |

## ARTIKEL: 52483 — PROFIL 6300

| POS.NR. ITEM NMB. | BESTELL-BEZEICHNUNG | DESCRIPTION | BESTELL-NUMMER LIST PART NMB. |
|---|---|---|---|
| | **VERPACKUNGSMATERIAL** | **PACKING MATERIAL** | |
| | VERPACKUNGSKARTON | PACKING | 245-85474.002 |
| | PACKSCHALEN-SATZ | POLYFOAM PACK.PARTS | 252-85472.050 |
| | SCHUTZSTREIFEN 1200 X 800 MM | PROTECTIVE STRIP | 253-84666.001 |
| | SCHUTZSTREIFEN 350 X 160 MM(IR-G.) | PROTECTIVE STRIP | 253-84666.004 |
| | **GEBER ERSATZTEILE** | **SPARE PARTS FOR TRANSMITTER** | |
| C 9101 | ELKO 1000U 10V | ELECTROLYT CAPACITOR | 360-12359 |
| D 9123 | DIODE TSUS 5222 | DIODE | 353-17924 |
| | IR-FENSTER | WINDOW | 666-84526.001 |
| | GEHÄUSEUNTERTEIL | CABINET LOWER PART | 756-84523.001 |
| | GEHÄUSE-OBERTEIL | CABINET UPPER PART | 756-84524.002 |
| | BATTERIEDECKEL BEDR.LOEWE. | BATTERY LID | 756-84525.005 |
| Q 9111 | KERAM.FILTER 429,0 KHZ | CERAMIC FILTER | 386-18622 |
| | KONTAKTMATTE | CONTACT MAT | 309-84527.011 |
| | BATTERIEFEDER 1-FACH | BATTERY SPRING | 739-85278.001 |
| | BATTERIEFEDER 2-FACH | BATTERY SPRING | 739-85279.001 |

## ARTIKEL: 52480 — PROFIL 7000

| POS.NR. ITEM NMB. | BESTELL-BEZEICHNUNG | DESCRIPTION | BESTELL-NUMMER LIST PART NMB. |
|---|---|---|---|
| | **BAUGRUPPEN** | **UNITS** | |
| U 1100 | HYPERBAND-TUNER KPL. 8MHZ/STAND-BG/C9003 | TUNER | 260-85187.050T |
| U 3371 | BILDROHRPLATTE C9003 21/28" | CRT BOARD | 396-83616.063 |
| U 7811 | VT-DECODER C9003 MIT KONTAKTLEISTEN | TELETEXT DECODER P.C.B | 396-85004.055T |
| U 8211 | BEDIENPLATTE C9003 | CONTROL PLATE | 396-85841.050 |
| | **TRANSISTOREN** | **TRANSISTORS** | |
| | BF 869 | | 346-18902 |
| | BC 557 B | | 346-74878 |
| | BC 547 C | | 346-79589 |
| | BUZ 71AF1 | | 346-18528 |
| | BC 639 | | 346-75622 |
| | BC 547 B | | 346-74983 |
| T 0526 | BD 139/16 M.FER.PERLE | | 346-15826.050 |
| T 0534 | S 2000 AF | | 346-16204 |
| T 0593 | BC 546 B | | 346-74968 |
| T 0594 | BD 537 | | 346-77764 |
| T 0624 | S 2000 AF | | 346-16203 |
| | **INTEGR.SCHALTUNGEN** | **INTEGRATED CIRCUITS** | |
| I 0211 | X27C16P PROG.F407 | | 349-90535.407 |
| I 0311 | TEA 2124 | | 349-19865 |
| I 0321 | VCU 2136-19/23/39/46 | | 349-18444 |
| I 0351 | ACVP 2205-25/26 | | 349-21121 |
| I 0361 | DTI 2223-14 | | 349-18371 |
| I 0371 | MCU 2600-56 | | 349-15714 |
| I 0401 | 78 L 05 ACP | | 349-15209 |
| I 0421 | ADC 2311-17/26 | | 349-18639 |
| I 0441 | APU 2471-05/13/31 | | 349-18227 |
| I 0474 | TDA 2030 A | | 349-15866 |
| I 0484 | TDA 2030 A | | 349-15866 |
| I 0511 | DPU 2553-25 | | 349-21374 |
| I 0561 | TDA 8175 | | 349-15721 |
| I 0611 | TDA 4600-2/TDA 4601 | | 349-10055 |
| I 0666 | TL 431 CLP | | 349-18230.020 |
| I 0676 | TL 431 CLP | | 349-18230.020 |
| I 0681 | 78 L 05 ACP | | 349-15209 |
| I 7811 | TPU 2735-23/37 | | 349-18860 |
| I 7821 | .41256-15 | | 349-14819 |
| I 7836 | 27PC512 PROG.C-V1.14 | | 349-20100.058 |
| I 8016 | TFMS 5360 | | 291-22155 |
| | **DIODEN** | **DIODES** | |
| | RGP 10 | | 352-18460 |
| | BA 157 | | 352-44799 |
| | ZPD 12 | | 352-44202 |
| | 1 N 4148 | | 352-31818 |
| | BY 398 | | 352-11109 |
| | PLR 817 | | 352-79586 |

## ARTIKEL: 52480 PROFIL 7000

| POS.NR. ITEM NMB. | BESTELL-BEZEICHNUNG | DESCRIPTION | BESTELL-NUMMER LIST PART NMB. |
|---|---|---|---|
| | **DIODEN** | **DIODES** | |
| | BYW 96-D | | 352-21059 |
| D 0206 | ZPD 30 G | | 352-15763 |
| D 0211 | BZX 79 B 5 V6 | | 352-11683 |
| D 0292 | BZX 79 C 9 V1 | | 352-76387 |
| D 0329 | ZPD 5,1 | | 352-13139 |
| D 0536 | BY 228 | | 352-10834 |
| D 0543 | BY 269 | | 352-18692 |
| D 0561 | 1 N 4001 | | 352-47247 |
| D 0613 | B 380 C1500 SKB | | 354-12667 |
| D 0624 | 1 N 4007 | | 352-79585 |
| D 0661 | BYW 98-100 C1 STM | | 352-20535 |
| D 0671 | BYS 26/45 | | 352-12657 |
| D 8206 | TLHR 4400 ROT | | 353-17887 |
| D 8207 | TLHG 4400 GRÜN | | 353-17888 |
| | **SPULEN/LAUTSPRECHER** | **COILS,SPEAKERS** | |
| | LAUTSPR. 8 OHM 3,5W | LOUDSPEAKER | 272-81731 |
| | LAUTSPR. 8 OHM 16W | LOUDSPEAKER | 272-84387 |
| L 0528 | TREIBERSPULE | COIL | 297-12134 |
| L 0531 | Z-TRAFO VORM. | LINE TRANSFORMER | 276-20130.050 |
| L 0541 | LIN-REGLER | LINEARITY REGULATOR | 278-20366 |
| L 0639 | WANDLERTRAFO KPL. | TRANSDUCER TRANSFOR. | 490-19994 |
| L 6001 | ENTMAGN.SPULE 28" | DEMAGNETIZING COIL | 297-83010.002 |
| | **QUARZE** | **QUARTZES** | |
| Q 0374 | 17,73448 MHZ | | 385-15726 |
| Q 7833 | 4,0 MHZ | | 385-18331 |
| | **BUCHSEN/FASSUNGEN** | **SOCKETS** | |
| | BILDROHRFASSUNG | PICTURE TUBE SOCKET | 320-16428 |
| | IC-FASSUNG 32-POL. | SOCKET | 320-22087 |
| | IC-FASSUNG 24-POL. | SOCKET | 320-80469 |
| | IC-FASSUNG 40-POL. | SOCKET | 320-80502 |
| | IC-FASSUNG 8-POL. | SOCKET | 320-80503 |
| | SICHERUNGSHALTEFEDER F. S 611 | FUSEHOLDER SPRING | 730-21447 |
| W 0323 | SCART-BUCHSE 21-POL. | SOCKET | 323-11799 |
| W 0479 | LAUTSPRECHERBUCHSE | SPEAKER SOCKET | 323-49752 |
| W 0489 | LAUTSPRECHERBUCHSE | SPEAKER SOCKET | 323-49752 |
| W 8461 | KOPFHÖRERBUCHSE (KLINKE) | HEADPHONE SOCKET | 323-15966 |
| | **SCHALTER** | **SWITCHES** | |
| S 8001 | TASTER F‹R C, - + | SWITCH | 467-17895 |
| S 8002 | TASTER F‹R C, - + | SWITCH | 467-17895 |
| S 8003 | TASTER F‹R C, - + | SWITCH | 467-17895 |
| S 8101 | NETZSCHALTER | POWER SWITCH | 471-84423 |

## ARTIKEL: 52480 — PROFIL 7000

| POS.NR. ITEM NMB. | BESTELL-BEZEICHNUNG | DESCRIPTION | BESTELL-NUMMER LIST PART NMB. |
|---|---|---|---|
| | **POTENTIOMETER** | **POTENTIOMETERS** | |
| P 0311 | 100R | | 375-18867 |
| P 0362 | 2M2 | | 375-17337 |
| P 0368 | 22K | | 375-15659 |
| P 0388 | 2K2 | | 375-15652 |
| P 0413 | 10K | | 375-20098 |
| P 0633 | 4K7 | | 375-15658 |
| | **WIDERSTÄNDE** | **RESISTORS** | |
| R 0206 | 22K J | | 367-19671 |
| R 0211 | 39R J 0207 | | 367-18358 |
| R 0326 | 39R J 0207 | | 367-18358 |
| R 0327 | 39R J 0207 | | 367-18358 |
| R 0328 | 39R J 0207 | | 367-18358 |
| R 0363 | 820R K 0411 | | 365-77681 |
| R 0364 | 1K5 K 0411 | | 365-77586 |
| R 0366 | 100R J 0309 | | 366-17757 |
| R 0375 | 18K G 0207 | | 367-11559 |
| R 0376 | 560R J 0207 | | 366-80643 |
| R 0378 | 820R K 0411 | | 365-77681 |
| R 0379 | 10K G 0207 | | 367-17551 |
| R 0385 | 18K G 0207 | | 367-11559 |
| R 0386 | 560R J 0207 | | 366-80643 |
| R 0388 | 820R K 0411 | | 365-77681 |
| R 0389 | 10K G 0207 | | 367-17551 |
| R 0395 | 18K G 0207 | | 367-11559 |
| R 0396 | 560R J 0207 | | 366-80643 |
| R 0398 | 820R K 0411 | | 365-77681 |
| R 0399 | 10K G 0207 | | 367-17551 |
| R 0403 | 10R K 0207 | | 366-74368 |
| R 0466 | 330R K 4 W | | 368-18246 |
| R 0468 | 330R K 4 W | | 368-18246 |
| R 0491 | 10R J 0207 | | 367-18080 |
| R 0516 | 1K F 0204 | | 367-17134 |
| R 0521 | 3R3 K 0207 | | 366-11790 |
| R 0522 | 100R F 0204 | | 367-15082 |
| R 0524 | 150R G 0207 | | 367-18079 |
| R 0528 | 68R K 4 W | | 368-10945 |
| R 0531 | 10R K 9W | | 368-18616 |
| R 0532 | 1R5 K 4 W | | 368-17204 |
| R 0542 | 10K J 4 W | | 368-14686 |
| R 0544 | 390K K 0411 | | 365-47678.021 |
| R 0546 | 130K F 0204 | | 367-16961 |
| R 0547 | 4R7 J 0,5 W | | 368-10946 |
| R 0557 | 0R22 K 0309 | | 366-79506 |
| R 0561 | 1R5 K 0309 | | 366-17899 |
| R 0566 | 4K7 F 0204 | | 367-17190 |
| R 0571 | 560R G 0207 | | 367-20349 |
| R 0572 | 1K8 F 0204 | | 367-12201 |
| R 0573 | 1K8 F 0204 | | 367-12201 |
| R 0574 | 0R82 K 4 W | | 368-11091 |
| R 0576 | 22K F 0204 | | 367-11588 |
| R 0577 | 13K G 0207 | | 367-16240 |

## ARTIKEL: 52480 PROFIL 7000

| POS.NR. ITEM NMB. | BESTELL-BEZEICHNUNG | DESCRIPTION | BESTELL-NUMMER LIST PART NMB. |
|---|---|---|---|
| | **WIDERSTÄNDE** | **RESISTORS** | |
| R 0578 | 68R G 0204 | | 367-15705 |
| R 0579 | 8K2 G 0204 | | 367-15707 |
| R 0583 | 100R F 0204 | | 367-15082 |
| R 0584 | 2K2 J 0204 | | 367-14878 |
| R 0586 | 10K F 0204 | | 367-16485 |
| R 0587 | 3K9 J 0204 | | 367-15708 |
| R 0588 | 8K2 G 0204 | | 367-15707 |
| R 0589 | 100K F 0204 | | 367-17812 |
| R 0591 | 3K3 F 0204 | | 367-14897 |
| R 0592 | 1K5 F 0204 | | 367-11503 |
| R 0593 | 5K6 J 0204 | | 367-14884 |
| R 0613 | 1R K 4 W | | 368-79913 |
| R 0619 | DUO-PTC-WIDERSTAND | | 372-73056 |
| R 0621 | 2K7 J 0617 | | 367-12723 |
| R 0622 | 4K M PTC-R | | 372-13349 |
| R 0627 | 270K G 0207 | | 367-15823 |
| R 0632 | 1K2 F 0204 | | 367-16202 |
| R 0633 | 12K G 0207 | | 367-16394 |
| R 0637 | 47R K 3 W | | 368-14191 |
| R 0639 | 10M J 0411 | | 367-19664 |
| R 0668 | 18K F 0204 | | 367-18527 |
| R 0669 | 4K7 F 0204 | | 367-17190 |
| R 0677 | 10K F 0204 | | 367-16485 |
| R 0678 | 10K F 0204 | | 367-16485 |
| R 0681 | 33R J 0309 | | 366-20128 |
| R 0686 | 0R1 K 0207 | | 366-10905 |
| R 0687 | 0R1 K 0207 | | 366-10905 |
| R 0688 | 3R3 K 17 W | | 368-47941 |
| R 8401 | 22R J 0207 | | 366-79915 |
| R 8402 | 22R J 0207 | | 366-79915 |
| | **KONDENSATOREN** | **CAPACITORS** | |
| | 100P 63 V | | 357-42786 |
| | 47P 63 V | | 357-46102 |
| | 2U2 50V BP | | 360-11167 |
| | 56P 63 V | | 357-48654 |
| | 180P 63 V | | 357-11345 |
| | 1000U 40V | | 360-80167 |
| | 1U 50V | | 359-10095.02O |
| | 1U 50 V | | 360-80618 |
| | 22P 63 V | | 357-50756 |
| | 2200U 35V | | 360-77756 |
| C 0312 | 10U 16V BP | | 360-13810.02O |
| C 0314 | 4U7 16V BP | | 360-79039 |
| C 0316 | 27P 63 V | | 357-49571 |
| C 0362 | 22N 2000 V | | 357-22266 |
| C 0386 | 4N7 63V | | 359-12177 |
| C 0536 | 10N 3,5% 1,5KV | | 359-80747 |
| C 0537 | 22N 400V | | 359-14119 |
| C 0539 | 1N5 1600 V | | 359-19973 |
| C 0544 | 1N5 20% 2 KV | | 359-18719 |
| C 0558 | 2200U 40V | | 360-18117 |

## ARTIKEL: 52480 — PROFIL 7000

| POS.NR. ITEM NMB. | BESTELL-BEZEICHNUNG | DESCRIPTION | BESTELL-NUMMER LIST PART NMB. |
|---|---|---|---|
| | **KONDENSATOREN** | **CAPACITORS** | |
| C 0612 | 220N 250VW | | 359-77769 |
| C 0613 | 150N 250VW | | 359-11322 |
| C 0619 | 100N 250VW | | 359-71061 |
| C 0626 | 2N2 1000V | | 359-11894 |
| C 0634 | 1U 63V | | 360-75974 |
| C 0639 | 3N3 400 VW | | 357-12003 |
| C 0650 | 1N 1 KV | | 357-73102 |
| C 0672 | 2200U 25V | | 360-15762 |
| | **SICHERUNGEN** | **FUSES** | |
| S 0611 | 2,5 A 250V 5X20 | | 380-45568 |
| S 0656 | 1,25 A 250V | | 380-17123.020 |
| S 0661 | 2,0 A 250V 8X8 | | 380-16779.020 |
| S 0671 | 6,3 A 250V 8X8 | | 380-15727.020 |
| | **VERBINDUNGSLEITUNG** | **CONNECTING CABLES** | |
| | NETZKABEL SCHWARZ, 2250 MM LG. | POWER CORD | 170-73310.070 |
| | NETZKABEL, 2250LG. WEISS | POWER CORD | 170-73310.072 |
| | **GEHÄUSETEILE** | **CABINET MOUNTING** | |
| | EINLAGE FÜR ZIERGITTER | INSERT | 411-85645.011 |
| | EINLAGE BEIGE | INSERT | 411-85645.012 |
| | SCHRAUBE 7X40 VZKT. F.BILDROHRBEFESTIG. | SCREW | 440-18058 |
| | DISTANZSTÜCK F.BILDROHRBEFESTG. | SPACER PIECE | 503-17983 |
| | TRÄGER/BEDIENUNG | SUPPORTER | 541-85468.011 |
| | VERSCHLUSS-STÜCK F.RÜCKWANDHALTER | FASTENER PIECE | 575-83567.001 |
| | VERSCHLUSS-BOLZEN F.RÜCKWAND | FASTENER BOLT | 576-83568.001 |
| | CHASSISHALTER LINKS | CHASSIS HOLDER | 602-81481.001 |
| | CHASSISHALTER RE. | CHASSIS HOLDER | 602-81482.021 |
| | ABDECKUNG | COVER | 703-85569.002 |
| | ABDECKUNG WEISS | COVER | 703-85569.004 |
| | KLAPPE/BEDIENUNG | DOOR ASSY. | 703-85469.001 |
| | ZIERGITTER SCHWARZ | ORNAMENTAL GRILLE | 708-85477.003 |
| | ZIERGITTER WEISS | ORNAMENTAL GRILLE | 708-85477.004 |
| | FFS-GEHÄUSE WEISS 28" | CABINET | 750-90247.960 |
| | FFS-GEHÄUSE VORM. SCHWARZ 28" | CABINET | 750-90247.990 |
| | RÜCKWAND SCHWARZ | REAR PANEL | 775-85476.011 |
| | RÜCKWAND WEISS | REAR PANEL | 775-85476.014 |
| | GEHÄUSEFUSS | CABINET FOOT | 783-82251.008 |
| | GEHÄUSEFUSS | CABINET FOOT | 783-82251.009 |
| | SPAXSCHRAUBE 4X13 | SCREW | 443-18169 |
| | BILDRÖHRE "PH" A66-EAK220X01 28" | PICTURE TUBE | 345-20857 |
| | **KNÖPFE** | **BUTTONS** | |
| | KNOPF/TASTER, SCHWARZ | BUTTON | 682-85462.001 |
| | KNOPF/NETZSCHALTER | BUTTON | 682-85471.001 |

## ARTIKEL: 52480 — PROFIL 7000

| POS.NR. ITEM NMB. | BESTELL-BEZEICHNUNG | DESCRIPTION | BESTELL-NUMMER LIST PART NMB. |
|---|---|---|---|
| | **ALLGEM.MECHAN.TEILE** | **COMMON MECHANICAL PARTS** | |
| | GLIMMERSCHEIBE 21X11 | MICA WASHER | 421-10881 |
| | KABELKLEMMHALTER M.STECKFUSS | CABLE SUPPORT | 530-81707.001 |
| | WIDERSTANDSHALTER | RESISTOR HOLDER | 602-19586 |
| | WIDERSTANDSHALTER | RESISTOR HOLDER | 602-23398.111 |
| | HALTER FÜR DIODE | HOLDER | 602-84535.011 |
| | ABDECKUNG,NETZ OBEN AM CHASSIS SEITLICH | COVER | 703-83527.011 |
| | ABDECKUNG/TUNERBUCHSE | COVER | 703-83529.011 |
| | MONTAGECLIP 6MM F.I561,T534,I611 | CLAMP CLIPS | 739-10230 |
| | MONTAGECLIP 3MM F.T663,D671,T534 | CLAMP CLIPS | 739-82691.001 |
| | **DRUCKSACHEN** | **OPERATING INSTRUCTIONS** | |
| | SERV.KURZANLTG.C9003 M.NEUEN BEDIENTEILEN | SERVICE INSTRUCTIONS | 230-22601 |
| | SERVICEANLEITUNG CONC.+PROF.6300/7000 | SERVICE INSTRUCTIONS | 230-90248.950 |
| | BED.KURZANLEITUNG -D/GB/I/F- C9003 | OPERATING INSTRUCTIONS | 233-20147.001 |
| | BED. ANLTG. -D-GB-I-F-C9003 PROFIL 7000/6300 | OPERATING INSTRUCTIONS | 233-22502 |
| | **GERÄTEBEIPACK** | **SET SUPPLEMENTS** | |
| | MIKROZELLE 1,5V IEC LR 03 | BATTERY | 280-13411.001 |
| | ANTENNENKABEL 1800LG.SCHWARZ | ANTENNA CABLE | 169-84674.001 |
| U 9111 | IR-GEBER KPL. FB 300 LOEWE. | TRANSMITTER | 263-85000.050 |
| | **VERPACKUNGSMATERIAL** | **PACKING MATERIAL** | |
| | VERPACKUNGSKARTON | PACKING | 245-85481.002 |
| | PACKACHALEN-SATZ | POLYFOAM PACK.PARTS | 252-85479.050 |
| | SCHUTZSTREIFEN, 1200 X 800 MM | PROTECTIVE STRIP | 253-84666.001 |
| | SCHUTZSTREIFEN, 350 X 160 MM(IR-G.) | PROTECTIVE STRIP | 253-84666.004 |
| | **GEBER-ERSATZTEILE** | **SPARE PARTS FOR TRANSMITTER** | |
| C 9101 | ELKO 1000U N 10V AA 8,7X21 | ELECTROLYT CAPACITOR | 360-12359 |
| D 9123 | DIODE TSUS 5222 | DIODE | 353-17924 |
| | IR-FENSTER | WINDOW | 666-84526.001 |
| | GEHÄUSEUNTERTEIL | CABINET LOWER PART | 756-84523.001 |
| | GEHÄUSE-OBERTEIL | CABINET UPPER PART | 756-84524.002 |
| | BATTERIEDECKEL BEDR.LOEWE. | BATTERY LID | 756-84525.005 |
| Q 9111 | KERAM.FILTER 429,0 KHZ | CERAMIC FILTER | 386-18622 |
| | KONTAKTMATTE | CONTACT MAT | 309-84527.011 |
| | BATTERIEFEDER 1-FACH | BATTERY SPRING | 739-85278.001 |
| | BATTERIEFEDER 2-FACH | BATTERY SPRING | 739-85279.001 |

## ARTIKEL: 52430 — CONCEPT PLUS 6300

| POS.NR. ITEM NMB. | BESTELL-BEZEICHNUNG | DESCRIPTION | BESTELL-NUMMER LIST PART NMB. |
|---|---|---|---|
| | **BAUGRUPPEN** | **UNITS** | |
| U 1100 | HYPERBANDTUNER 8MHZ MULTI C9003 | TUNER | 260-85137.051T |
| U 3371 | BILDROHRPLATTE C9003 21/28" | CRT BOARD | 396-83616.063 |
| U 7273 | SCHNITTSTELLE (I) | S-VHS P.C.B | 396-85002.051 |
| U 7811 | VT-DECODER C9003 MIT KONTAKTLEISTEN | TELETEXT DECODER P.C.B | 396-85004.055T |
| U 8211 | BEDIENPLATTE C9003 | CONTROL PLATE | 396-85709.050 |
| | **TRANSISTOREN** | **TRANSISTORS** | |
| | BC 557 B | | 346-74878 |
| | BF 869 | | 346-18902 |
| | BC 547 C | | 346-79589 |
| | BUZ 71AF1 | | 346-18528 |
| | BC 547 B | | 346-74983 |
| | BC 639 | | 346-75622 |
| T 0388 | 3R3 K 17 W | | 368-47941 |
| T 0526 | BD 139/16 M.FER.PERLE | | 346-15826.050 |
| T 0534 | S 2000 AF | | 346-16204 |
| T 0593 | BC 546 B | | 346-74968 |
| T 0594 | BD 537 | | 346-77764 |
| T 0624 | S 2000 AF | | 346-16203 |
| | **INTEGR.SCHALTUNGEN** | **INTEGRATED CIRCUITS** | |
| I 0211 | X27C16P PROG.F427 | | 349-90535.427 |
| I 0311 | TEA 2124 | | 349-19865 |
| I 0321 | VCU 2136-19/23/39/46 | | 349-18444 |
| I 0341 | SPU 2243-14 | | 349-21131 |
| I 0351 | ACVP 2205-25/26 | | 349-21121 |
| I 0361 | DTI 2223-14 | | 349-18371 |
| I 0371 | MCU 2600-56 | | 349-15714 |
| I 0401 | 78 L 05 ACP | | 349-15209 |
| I 0421 | ADC 2311-17/26 | | 349-18639 |
| I 0441 | APU 2471-05/13/31 | | 349-18227 |
| I 0474 | TDA 2030 A | | 349-15866 |
| I 0484 | TDA 2030 A | | 349-15866 |
| I 0511 | DPU 2553-25 | | 349-21374 |
| I 0561 | TDA 8175 | | 349-15721 |
| I 0611 | TDA 4600-2/TDA 4601 | | 349-10055 |
| I 0666 | TL 431 CLP | | 349-18230.020 |
| I 0676 | TL 431 CLP | | 349-18230.020 |
| I 0681 | 78 L 05 ACP | | 349-15209 |
| I 7121 | TEA 6415-A/B STM | | 349-19361 |
| I 7221 | TEA 6415-A/B STM | | 349-19361 |
| I 7321 | TEA 6420-L STM | | 349-19362 |
| I 7323 | TEA 6420-L STM | | 349-19362 |
| I 7811 | TPU 2735-23/37 | | 349-18860 |
| I 7821 | .41256-15 | | 349-14819 |
| I 7836 | 27PC512 PROG.C-V1.14 | | 349-20100.058 |
| I 8016 | TFMS 5360 | | 291-22155 |

| POS.NR. ITEM NMB. | BESTELL-BEZEICHNUNG | DESCRIPTION | BESTELL-NUMMER LIST PART NMB. |
|---|---|---|---|
| | **DIODEN** | **DIODES** | |
| | PLR 817 | | 352-79586 |
| | BA 157 | | 352-44799 |
| | BY 398 | | 352-11109 |
| | 1 N 4148 | | 352-31818 |
| | BYW 96-D | | 352-21059 |
| | RGP 10 | | 352-18460 |
| D 0206 | ZPD 30 G | | 352-15763 |
| D 0211 | BZX 79 B 5 V6 | | 352-11683 |
| D 0292 | BZX 79 C 9 V1 | | 352-76387 |
| D 0329 | ZPD 5,1 | | 352-13139 |
| D 0536 | BY 228 | | 352-10834 |
| D 0543 | BY 269 | | 352-18692 |
| D 0561 | 1 N 4001 | | 352-47247 |
| D 0613 | B 380 C1500 SKB | | 354-12667 |
| D 0624 | 1 N 4007 | | 352-79585 |
| D 0661 | BYW 98-100 C1 STM | | 352-20535 |
| D 0663 | ZPD 12 | | 352-44202 |
| D 0671 | BYS 26/45 | | 352-12657 |
| D 8206 | LED TLHR 4400 ROT | DIODE | 353-17887 |
| D 8207 | LED TLHG 4400 GRÜN | DIODE | 353-17888 |
| | **SPULEN/LAUTSPRECHER** | **COILS,SPEAKERS** | |
| | FERRIT-DÄMPF.PERLE | FERROX BEAD | 522-18793 |
| L 0528 | TREIBERSPULE | COIL | 297-12134 |
| L 0531 | ZEILENTRAFO | LINE TRANSFORMER | 276-20695 |
| L 0541 | LIN-REGLER | LINEARITY REGULATOR | 278-20366 |
| L 0639 | WANDLERTRAFO KPL. | TRANSDUCER TRANSFOR. | 490-19994 |
| L 6001 | ENTMAG.SPULE | DEMAGNETIZING COIL | 297-83150.002 |
| | **QUARZE** | **QUARTZES** | |
| Q 0374 | 17,73448 MHZ | | 385-15726 |
| Q 0376 | 14,31818 MHZ | | 385-15725 |
| Q 7833 | 4,0 MHZ | | 385-18331 |
| | **BUCHSEN/FASSUNGEN** | **SOCKETS** | |
| | BILDROHRFASSUNG | PICTURE TUBE SOCKET | 320-16428 |
| | IC-FASSUNG 32-POL. | SOCKET | 320-22087 |
| | IC-FASSUNG 24-POL. | SOCKET | 320-80469 |
| | IC-FASSUNG 40-POL. | SOCKET | 320-80502 |
| | IC-FASSUNG 8-POL. | SOCKET | 320-80503 |
| | SICHERUNGSHALTEFEDER F. S 611 | FUSEHOLDER SPRING | 730-21447 |
| W 0323 | SCART-BUCHSE 21-POL. | SOCKET | 323-11799 |
| W 0479 | LAUTSPRECHERBUCHSE | SPEAKER SOCKET | 323-49752 |
| W 0489 | LAUTSPRECHERBUCHSE | SPEAKER SOCKET | 323-49752 |
| W 7151 | SCART-BUCHSE 21-POL. | SOCKET | 323-11799 |
| W 7393 | CINCH-BUCHSE ROT | SOCKET | 323-17952 |
| W 7398 | CINCH-BUCHSE WEISS | SOCKET | 323-17954 |
| W 8311 | CINCH-BUCHSE WEISS | SOCKET | 323-17954 |
| W 8321 | CINCH-BUCHSE ROT | SOCKET | 323-17952 |

## ARTIKEL: 52430 — CONCEPT PLUS 6300

| POS.NR. ITEM NMB. | BESTELL-BEZEICHNUNG | DESCRIPTION | BESTELL-NUMMER LIST PART NMB. |
|---|---|---|---|
| | **BUCHSEN/FASSUNGEN** | **SOCKETS** | |
| W 8331 | MINI-DIN-BUCHSE | SOCKET | 323-18108 |
| W 8461 | KOPFHÖRERBUCHSE (KLINKE) | HEADPHONE SOCKET | 323-15966 |
| | **SCHALTER** | **SWITCHES** | |
| S 8028 | TASTER F‹R C, - + | SWITCH | 467-17895 |
| S 8029 | TASTER F‹R C, - + | SWITCH | 467-17895 |
| S 8056 | TASTER F‹R C, - + | SWITCH | 467-17895 |
| | NETZSCHALTER | POWER SWITCH | 471-82015.001 |
| | **POTENTIOMETER** | **POTENTIOMETERS** | |
| P 0311 | 100R | | 375-18867 |
| P 0362 | 2M2 | | 375-17337 |
| P 0368 | 22K | | 375-15659 |
| P 0388 | 2K2 | | 375-15652 |
| P 0413 | 10K | | 375-20098 |
| | **WIDERSTÄNDE** | **RESISTORS** | |
| R 0206 | 22K J | | 367-19671 |
| R 0211 | 39R J 0207 | | 367-18358 |
| R 0326 | 39R J 0207 | | 367-18358 |
| R 0327 | 39R J 0207 | | 367-18358 |
| R 0328 | 39R J 0207 | | 367-18358 |
| R 0363 | 820R K 0411 | | 365-77681 |
| R 0364 | 1K5 K 0411 | | 365-77586 |
| R 0366 | 100R J 0309 | | 366-17757 |
| R 0375 | 18K G 0207 | | 367-11559 |
| R 0376 | 560R J 0207 | | 366-80643 |
| R 0378 | 820R K 0411 | | 365-77681 |
| R 0379 | 10K G 0207 | | 367-17551 |
| R 0385 | 18K G 0207 | | 367-11559 |
| R 0386 | 560R J 0207 | | 366-80643 |
| R 0388 | 820R K 0411 | | 365-77681 |
| R 0389 | 10K G 0207 | | 367-17551 |
| R 0395 | 18K G 0207 | | 367-11559 |
| R 0396 | 560R J 0207 | | 366-80643 |
| R 0398 | 820R K 0411 | | 365-77681 |
| R 0399 | 10K G 0207 | | 367-17551 |
| R 0403 | 10R K 0207 | | 366-74368 |
| R 0466 | 330R K 4 W | | 368-18246 |
| R 0468 | 330R K 4 W | | 368-18246 |
| R 0491 | 10R J 0207 | | 367-18080 |
| R 0516 | 1K F 0204 | | 367-17134 |
| R 0521 | 3R3 K 0207 | | 366-11790 |
| R 0522 | 100R F 0204 | | 367-15082 |
| R 0524 | 150R G 0207 | | 367-18079 |
| R 0528 | 68R K 4 W | | 368-10945 |
| R 0531 | 10R K 9W | | 368-18616 |
| R 0532 | 1R5 K 4 W | | 368-17204 |
| R 0542 | 10K J 4 W | | 368-14686 |
| R 0544 | 390K K 0411 | | 365-47678.021 |

| POS.NR. ITEM NMB. | BESTELL-BEZEICHNUNG | DESCRIPTION | BESTELL-NUMMER LIST PART NMB. |
|---|---|---|---|
| | **WIDERSTÄNDE** | **RESISTORS** | |
| R 0546 | 130K F 0204 | | 367-16961 |
| R 0547 | 4R7 J 0,5 W | | 368-10946 |
| R 0557 | 0R22 K 0309 | | 366-79506 |
| R 0561 | 1R5 K 0309 | | 366-17899 |
| R 0566 | 4K7 F 0204 | | 367-17190 |
| R 0571 | 560R G 0207 | | 367-20349 |
| R 0572 | 1K8 F 0204 | | 367-12201 |
| R 0573 | 1K8 F 0204 | | 367-12201 |
| R 0574 | 0R82 K 4 W | | 368-11091 |
| R 0576 | 22K F 0204 | | 367-11588 |
| R 0577 | 13K G 0207 | | 367-16240 |
| R 0578 | 68R G 0204 | | 367-15705 |
| R 0579 | 8K2 G 0204 | | 367-15707 |
| R 0583 | 100R F 0204 | | 367-15082 |
| R 0584 | 2K2 J 0204 | | 367-14878 |
| R 0586 | 10K F 0204 | | 367-16485 |
| R 0587 | 3K9 J 0204 | | 367-15708 |
| R 0588 | 8K2 G 0204 | | 367-15707 |
| R 0589 | 100K F 0204 | | 367-17812 |
| R 0591 | 3K3 F 0204 | | 367-14897 |
| R 0592 | 1K5 F 0204 | | 367-11503 |
| R 0593 | 5K6 J 0204 | | 367-14884 |
| R 0613 | 1R K 4 W | | 368-79913 |
| R 0619 | DUO-PTC-WIDERSTAND | | 372-73056 |
| R 0621 | 2K7 J 0617 | | 367-12723 |
| R 0622 | 4K M PTC-R | | 372-13349 |
| R 0627 | 270K G 0207 | | 367-15823 |
| R 0632 | 1K2 F 0204 | | 367-16202 |
| R 0633 | 12K G 0207 | | 367-16394 |
| R 0637 | 47R K 3 W | | 368-14191 |
| R 0639 | 10M J 0411 | | 367-19664 |
| R 0668 | 18K F 0204 | | 367-18527 |
| R 0669 | 4K7 F 0204 | | 367-17190 |
| R 0677 | 10K F 0204 | | 367-16485 |
| R 0678 | 10K F 0204 | | 367-16485 |
| R 0681 | 33R J 0309 | | 366-20128 |
| R 0686 | 0R1 K 0207 | | 366-10905 |
| R 0687 | 0R1 K 0207 | | 366-10905 |
| R 0688 | 3R3 K 17 W | | 368-47941 |
| R 7101 | 0R22 K 0207 | | 366-72845 |
| R 7108 | 4R7 K 0207 | | 366-18416 |
| R 7111 | 4R7 K 0207 | | 366-18416 |
| R 8401 | 22R J 0207 | | 366-79915 |
| R 8402 | 22R J 0207 | | 366-79915 |
| | **KONDENSATOREN** | **CAPACITORS** | |
| | 47P 63 V | | 357-46102 |
| | 56P 63 V | | 357-48654 |
| | 1000U 40V | | 360-80167 |
| | 100P 63 V | | 357-42786 |
| | 1U 50V | | 359-10095.020 |
| | 1U 50 V | | 360-80618 |

| POS.NR. ITEM NMB. | ARTIKEL: 52430 BESTELL-BEZEICHNUNG | CONCEPT PLUS 6300 DESCRIPTION | BESTELL-NUMMER LIST PART NMB. |
|---|---|---|---|
| | **KONDENSATOREN** | **CAPACITORS** | |
| | 2200U 35V | | 360-77756 |
| | 180P 63 V | | 357-11345 |
| C 0312 | 10U 16V BP | | 360-13810.020 |
| C 0314 | 4U7 16V BP | | 360-79039 |
| C 0316 | 27P 63 V | | 357-49571 |
| C 0358 | 220U 16V | | 360-13949 |
| C 0362 | 22N 2000 V | | 357-22266 |
| C 0485 | 22P 63 V | | 357-50756 |
| C 0536 | 10N 3,5% 1,5KV | | 359-80747 |
| C 0539 | 1N5 1600 V | | 359-19973 |
| C 0544 | 1N5 20% 2 KV | | 359-18719 |
| C 0558 | 2200U 40V | | 360-18117 |
| C 0612 | 220N 250VW | | 359-77769 |
| C 0613 | 150N 250VW | | 359-11322 |
| C 0619 | 100N 250VW | | 359-71061 |
| C 0626 | 2N2 1000V | | 359-11894 |
| C 0634 | 1U 63V | | 360-75974 |
| C 0639 | 3N3 400 VW | | 357-12003 |
| C 0650 | 1N 1 KV | | 357-73102 |
| C 0672 | 2200U 25V | | 360-15762 |
| | **SICHERUNGEN** | **FUSES** | |
| S 0611 | 2,5 A 250V 5X20 | | 380-45568 |
| S 0656 | 1,25 A 250V | | 380-17123.020 |
| S 0661 | 2,0 A 250V 8X8 | | 380-16779.020 |
| S 0671 | 6,3 A 250V 8X8 | | 380-15727.020 |
| | **VERBINDUNGSLEITUNG** | **CONNECTING CABLES** | |
| | NETZKABEL SCHWARZ 2250 MM LG.LÖTBAR | POWER CORD | 170-73310.051 |
| | **GEHÄUSETEILE** | **CABINET MOUNTING** | |
| | SCHAUMSTOFF-EINLAGE SCHWARZ-F.ZIERGITTER | INSERT | 411-84652.001 |
| | SCHAUMSTOFF-EINLAGE BEIGE F.ZIERGITTER | INSERT | 411-84652.002 |
| | RÜCKWANDSCHRAUBE M 4,0X10 SW 8,6-KT. | SCREW | 434-78562.003 |
| | SCHRAUBE 7X40 VZKT. F.BILDROHRBEFESTIG. | SCREW | 440-18058 |
| | DISTANZSTÜCK F.BILDROHRBEFESTG. | SPACER PIECE | 503-17983 |
| | DISTANZSTÜCK FÜR GEH.VORDERT./BILDR.- | SPACER PIECE | 503-84629.001 |
| | TRÄGER/BEDIENUNG | SUPPORTER | 541-84566.012 |
| | TRÄGER/BEDEINUNG | SUPPORTER | 541-84566.013 |
| | TRÄGER/BEDIENUNG SCHWARZ | SUPPORTER | 541-84566.015 |
| | GEWINDELASCHE M 4 F.CHASSISHALTER | THREAD STRAP | 561-81547.101 |
| | KLEMMSTÜCK F.GEH.-UNTERTEIL | CLAMPING PIECE | 572-84579.001 |
| | VERSCHLUSS-STÜCK F.RÜCKWANDHALTER | FASTENER PIECE | 575-83567.001 |
| | VERSCHLUSS-BOLZEN F.RÜCKWAND | FASTENER BOLT | 576-83568.001 |
| | HALTER/RW | HOLDER | 602-84578.011 |
| | INFRAROT-FENSTER | WINDOW | 666-84571.001 |
| | ABDECKUNG(GEH.BODEN) F.LAUTSPR.-FACH | COVER | 703-84577.001 |

## ARTIKEL: 52430 CONCEPT PLUS 6300

| POS.NR. ITEM NMB. | BESTELL-BEZEICHNUNG | DESCRIPTION | BESTELL-NUMMER LIST PART NMB. |
|---|---|---|---|
| | **GEHÄUSETEILE** | **CABINET MOUNTING** | |
| | KLAPPE DUNKELGRAU | DOOR ASSY. | 706-84567.002 |
| | KLAPPE HELLGRAU | DOOR ASSY. | 706-84567.003 |
| | KLAPPE SCHWARZ | DOOR ASSY. | 706-84567.005 |
| | ZIERGITTER DUNKELGRAU | ORNAMENTAL GRILLE | 708-84575.002 |
| | ZIERGITTER HELLGRAU | ORNAMENTAL GRILLE | 708-84575.003 |
| | ZIERGITTER SCHWARZ | ORNAMENTAL GRILLE | 708-84575.005 |
| | GEHÄUSE-UNTERTEIL HELLGR.M.ZIERGITTER | CABINET LOWER PART | 750-90150.999 |
| | GEHÄUSE-UNTERTEIL DKL-GRAU M.ZIERGITT. | CABINET LOWER PART | 750-90154.904 |
| | GEHÄUSE-UNTERTEIL SCHWARZ M.ZIERGITTER | CABINET LOWER PART | 750-90178.950 |
| | GEHÄUSE-VORDERTEIL SCHWARZ MONTAGESATZ | CABINET FRONT | 750-90208.915 |
| | GEHÄUSE-VORDERTEIL H.GRAU MONTAGESATZ | CABINET FRONT | 750-90208.934 |
| | GEHÄUSE-VORDERTEIL DKL.GRAU MONTAGESATZ | CABINET FRONT | 750-90208.953 |
| | RÜCKWAND DUNKELGRAU 24" | REAR PANEL | 775-84573.012 |
| | RÜCKWAND HELLGRAU 24" | REAR PANEL | 775-84573.013 |
| | RÜCKWAND SCHWARZ 24" | REAR PANEL | 775-84573.015 |
| | GLEITER FARBLOS | SLIDER | 783-82251.005 |
| | LAUTSPRECHER 8 OHM 10W | LOUDSPEAKER | 272-84489 |
| | BILDRÖHRE "PH" A59-EAK252X01 24" | PICTURE TUBE | 345-22660 |
| | **KNÖPFE** | **BUTTONS** | |
| | KNOPF F. TASTER | BUTTON | 682-84568.001 |
| | KNOPF F.NETZSCHALTER | BUTTON | 682-84569.001 |
| | **ALLGEM.MECHAN.TEILE** | **COMMON MECHANICAL PARTS** | |
| | GLIMMERSCHEIBE 21X11 | MICA WASHER | 421-10881 |
| | KABELKLEMMHALTER M.STECKFUSS | CABLE SUPPORT | 530-81707.001 |
| | STÜTZE,S-VHS-BUCHSE | SUPPORT | 551-82022.001 |
| | WIDERSTANDSHALTER | RESISTOR HOLDER | 602-19586 |
| | WIDERSTANDSHALTER | RESISTOR HOLDER | 602-23398.111 |
| | HALTER FÜR DIODE | HOLDER | 602-84535.011 |
| | ABDECKUNG,NETZ OBEN AM CHASSIS SEITLICH | COVER | 703-83527.011 |
| | ABDECKUNG/TUNERBUCHSE | COVER | 703-83529.011 |
| | MONTAGECLIP 6MM F.I561,T534,I611 | CLAMP CLIPS | 739-10230 |
| | MONTAGECLIP 3MM F.T663,D671,T534 | CLAMP CLIPS | 739-82691.001 |
| | **DRUCKSACHEN** | **OPERATING INSTRUCTIONS** | |
| | SERV.KURZANLTG.C9003 M.NEUEN BEDIENTEILEN | SERVICE INSTRUCTIONS | 230-22601 |
| | BED.ANLTG. D-I-F-GB C9003 CONCEPT | OPERATING INSTRUCT. | 233-19558.005 |
| | BED.KURZANLEITUNG -D/GB/I/F- C9003 | OPERATING INSTRUCT. | 233-20147.001 |
| | **GERÄTEBEIPACK** | **SET SUPPLEMENTS** | |
| U 9111 | MIKROZELLE 1,5V IEC LR 03 | BATTERY | 280-13411.001 |
| | IR-GEBER KPL. FB 300 LOEWE. | TRANSMITTER | 263-85000.050 |

## ARTIKEL: 52430 — CONCEPT PLUS 6300

| POS.NR. ITEM NMB. | BESTELL-BEZEICHNUNG | DESCRIPTION | BESTELL-NUMMER LIST PART NMB. |
|---|---|---|---|
| | **GERÄTEBEIPACK** | **SET SUPPLEMENTS** | |
| | ANTENNENKABEL 1800LG.SCHWARZ | ANTENNA CABLE | 169-84674.001 |
| | **VERPACKUNGSMATERIAL** | **PACKING MATERIAL** | |
| | VERPACKUNGSKARTON LO-DRUCK | PACKING | 245-84584.002 |
| | PACKSCHALENSATZ | POLYFOAM PACK.PARTS | 252-84582.050 |
| | SCHUTZSTREIFEN 1200 X 800 MM | PROTECTIVE STRIP | 253-84666.001 |
| | SCHUTZSTREIFEN 350 X 160 MM(IR-G.) | PROTECTIVE STRIP | 253-84666.004 |
| | **GEBER-ERSATZTEILE** | **SPARE PARTS FOR TRANSMITTER** | |
| C 9101 | ELKO 1000U/10V | ELECTROLYT CAPACITOR | 360-12359 |
| D 9123 | DIODE TSUS 5222 | DIODE | 353-17924 |
| | IR-FENSTER | WINDOW | 666-84526.001 |
| | GEHÄUSEUNTERTEIL | CABINET LOWER PART | 756-84523.001 |
| | GEHÄUSE-OBERTEIL | CABINET UPPER PART | 756-84524.002 |
| | BATTERIEDECKEL BEDR. LOEWE. | BATTERY LID | 756-84525.005 |
| Q 9111 | KERAM.FILTER 429,0 KHZ | CERAMIC FILTER | 386-18622 |
| | KONTAKTMATTE | CONTACT MAT | 309-84527.011 |
| | BATTERIEFEDER 1-FACH | BATTERY SPRING | 739-85278.001 |
| | BATTERIEFEDER 2-FACH | BATTERY SPRING | 739-85279.001 |

## ARTIKEL: 52431 — CONCEPT PLUS 7000

| POS.NR. ITEM NMB. | BESTELL-BEZEICHNUNG | DESCRIPTION | BESTELL-NUMMER LIST PART NMB. |
|---|---|---|---|
| | **BAUGRUPPEN** | | **UNITS** |
| U 1100 | HYPERBANDTUNER 8MHZ MULTI C9003 | TUNER | 260-85137.051T |
| U 3371 | BILDROHRPLATTE C9003 21/28" | CRT BOARD | 396-83616.063 |
| U 7273 | SCHNITTSTELLE (I) (MOS) | INTERFACE P.C.B | 396-85002.051 |
| U 7811 | VT-DECODER C9003 MIT KONTAKTLEISTEN | TELETEXT DECODER | 396-85004.055T |
| U 8211 | BEDIENPLATTE C9003 | CONTROL PLATE | 396-85709.050 |
| | **TRANSISTOREN** | **TRANSISTORS** | |
| | BC 557 B | | 346-74878 |
| | BF 869 | | 346-18902 |
| | BC 547 C | | 346-79589 |
| | BUZ 71AF1 | | 346-18528 |
| | BC 547 B | | 346-74983 |
| | BC 639 | | 346-75622 |
| T 0526 | BD 139/16 M.FER.PERLE | | 346-15826.050 |
| T 0534 | S 2000 AF | | 346-16204 |
| T 0593 | BC 546 B | | 346-74968 |
| T 0594 | BD 537 | | 346-77764 |
| T 0624 | S 2000 AF | | 346-16203 |
| | **INTEGR.SCHALTUNGEN** | **INTEGRATED CIRCUITS** | |
| I 0211 | X27C16P PROG.F427 | | 349-90535.427 |
| I 0311 | TEA 2124 | | 349-19865 |
| I 0321 | VCU 2136-19/23/39/46 | | 349-18444 |
| I 0341 | SPU 2243-14 | | 349-21131 |
| I 0351 | ACVP 2205-25/26 | | 349-21121 |
| I 0361 | DTI 2223-14 | | 349-18371 |
| I 0371 | MCU 2600-56 | | 349-15714 |
| I 0401 | 78 L 05 ACP | | 349-15209 |
| I 0421 | ADC 2311-17/26 | | 349-18639 |
| I 0441 | APU 2471-05/13/31 | | 349-18227 |
| I 0474 | TDA 2030 A | | 349-15866 |
| I 0484 | TDA 2030 A | | 349-15866 |
| I 0511 | DPU 2553-25 | | 349-21374 |
| I 0561 | TDA 8175 | | 349-15721 |
| I 0611 | TDA 4600-2/TDA 4601 | | 349-10055 |
| I 0666 | TL 431 CLP | | 349-18230.020 |
| I 0676 | TL 431 CLP | | 349-18230.020 |
| I 0681 | 78 L 05 ACP | | 349-15209 |
| I 7121 | TEA 6415-A/B STM | | 349-19361 |
| I 7221 | TEA 6415-A/B STM | | 349-19361 |
| I 7321 | TEA 6420-L STM | | 349-19362 |
| I 7323 | TEA 6420-L STM | | 349-19362 |
| I 7811 | TPU 2735-23/37 | | 349-18860 |
| I 7821 | 41256-15 | | 349-14819 |
| I 7836 | 27PC512 PROG.C-V1.14 | | 349-20100.058 |
| I 8016 | TFMS 5360 | | 291-22155 |
| | **DIODEN** | **DIODES** | |
| | PLR 817 | | 352-79586 |
| | BA 157 | | 352-44799 |

| POS.NR. ITEM NMB. | ARTIKEL: 52431 BESTELL-BEZEICHNUNG | CONCEPT PLUS 7000 DESCRIPTION | BESTELL-NUMMER LIST PART NMB. |
|---|---|---|---|
| | **DIODEN** | **DIODES** | |
| | BY 398 | | 352-11109 |
| | 1 N 4148 | | 352-31818 |
| | BYW 96-D | | 352-21059 |
| | RGP 10 | | 352-18460 |
| D 0206 | ZPD 30 G | | 352-15763 |
| D 0211 | BZX 79 B 5 V6 | | 352-11683 |
| D 0292 | BZX 79 C 9 V1 | | 352-76387 |
| D 0329 | ZPD 5,1 | | 352-13139 |
| D 0536 | BY 228 | | 352-10834 |
| D 0543 | BY 269 | | 352-18692 |
| D 0561 | 1 N 4001 | | 352-47247 |
| D 0613 | B 380 C1500 SKB | | 354-12667 |
| D 0624 | 1 N 4007 | | 352-79585 |
| D 0661 | BYW 98-100 C1 STM | | 352-20535 |
| D 0663 | ZPD 12 | | 352-44202 |
| D 0671 | BYS 26/45 | | 352-12657 |
| D 8206 | LED TLHR 4400 ROT | DIODE | 353-17887 |
| D 8207 | LED TLHG 4400 GRÜN | DIODE | 353-17888 |
| | **SPULEN/LAUTSPRECHER** | **COILS,SPEAKERS** | |
| | FERRIT-DÄMPF.PERLE | FERROX BEAD | 522-18793 |
| L 0528 | TREIBERSPULE | COIL | 297-12134 |
| L 0531 | ZEILENTRAFO | LINE TRANSFORMER | 276-20695 |
| L 0541 | LIN-REGLER | LINEARITY REGULATOR | 278-20366 |
| L 0639 | WANDLERTRAFO KPL. | TRANSDUCER TRANSFOR. | 490-19994 |
| L 6001 | ENTMAGN.SPULE 28" | DEMAGNETIZING COIL | 297-83010.002 |
| | **QUARZE** | **QUARTZES** | |
| Q 0374 | 17,73448 MHZ | | 385-15726 |
| Q 0376 | 14,31818 MHZ | | 385-15725 |
| Q 7833 | 4,0 MHZ | | 385-18331 |
| | **BUCHSEN/FASSUNGEN** | **SOCKETS** | |
| | BILDROHRFASSUNG | PICTURE TUBE SOCKET | 320-16428 |
| | IC-FASSUNG 32-POL. | SOCKET | 320-22087 |
| | IC-FASSUNG 24-POL. | SOCKET | 320-80469 |
| | IC-FASSUNG 40-POL. | SOCKET | 320-80502 |
| | IC-FASSUNG 8-POL. | SOCKET | 320-80503 |
| | SICHERUNGSHALTEFEDER F. S 611 | FUSEHOLDER SPRING | 730-21447 |
| W 0323 | SCART-BUCHSE 21-POL. | SOCKET | 323-11799 |
| W 0479 | LAUTSPRECHERBUCHSE | SPEAKER SOCKET | 323-49752 |
| W 0489 | LAUTSPRECHERBUCHSE | SPEAKER SOCKET | 323-49752 |
| W 7151 | SCART-BUCHSE 21-POL. | SOCKET | 323-11799 |
| W 7393 | CINCH-BUCHSE ROT | SOCKET | 323-17952 |
| W 7398 | CINCH-BUCHSE WEISS | SOCKET | 323-17954 |
| W 8311 | CINCH-BUCHSE WEISS | SOCKET | 323-17954 |
| W 8321 | CINCH-BUCHSE ROT | SOCKET | 323-17952 |
| W 8331 | MINI-DIN-BUCHSE | SOCKET | 323-18108 |
| W 8461 | KOPFHÖRERBUCHSE (KLINKE) | HEADPHONE SOCKET | 323-15966 |

## ARTIKEL: 52431 — CONCEPT PLUS 7000

| POS.NR. ITEM NMB. | BESTELL-BEZEICHNUNG | DESCRIPTION | BESTELL-NUMMER LIST PART NMB. |
|---|---|---|---|
| | **SCHALTER** | **SWITCHES** | |
| S 8028 | TASTER F‹R C, - + | SWITCH | 467-17895 |
| S 8029 | TASTER F‹R C, - + | SWITCH | 467-17895 |
| S 8056 | TASTER F‹R C, - + | SWITCH | 467-17895 |
| | NETZSCHALTER | POWER SWITCH | 471-82015.001 |
| | **POTENTIOMETER** | **POTENTIOMETERS** | |
| P 0311 | 100R | | 375-18867 |
| P 0362 | 2M2 | | 375-17337 |
| P 0368 | 22K | | 375-15659 |
| P 0388 | 2K2 | | 375-15652 |
| P 0413 | 10K | | 375-20098 |
| | **WIDERSTÄNDE** | **RESISTORS** | |
| R 0206 | 22K J | | 367-19671 |
| R 0211 | 39R J 0207 | | 367-18358 |
| R 0326 | 39R J 0207 | | 367-18358 |
| R 0327 | 39R J 0207 | | 367-18358 |
| R 0328 | 39R J 0207 | | 367-18358 |
| R 0363 | 820R K 0411 | | 365-77681 |
| R 0364 | 1K5 K 0411 | | 365-77586 |
| R 0366 | 100R J 0309 | | 366-17757 |
| R 0375 | 18K G 0207 | | 367-11559 |
| R 0376 | 560R J 0207 | | 366-80643 |
| R 0378 | 820R K 0411 | | 365-77681 |
| R 0379 | 10K G 0207 | | 367-17551 |
| R 0385 | 18K G 0207 | | 367-11559 |
| R 0386 | 560R J 0207 | | 366-80643 |
| R 0388 | 820R K 0411 | | 365-77681 |
| R 0389 | 10K G 0207 | | 367-17551 |
| R 0395 | 18K G 0207 | | 367-11559 |
| R 0396 | 560R J 0207 | | 366-80643 |
| R 0398 | 820R K 0411 | | 365-77681 |
| R 0399 | 10K G 0207 | | 367-17551 |
| R 0403 | 10R K 0207 | | 366-74368 |
| R 0466 | 330R K 4 W | | 368-18246 |
| R 0468 | 330R K 4 W | | 368-18246 |
| R 0491 | 10R J 0207 | | 367-18080 |
| R 0516 | 1K F 0204 | | 367-17134 |
| R 0521 | 3R3 K 0207 | | 366-11790 |
| R 0522 | 100R F 0204 | | 367-15082 |
| R 0524 | 150R G 0207 | | 367-18079 |
| R 0528 | 68R K 4 W | | 368-10945 |
| R 0531 | 10R K 9W | | 368-18616 |
| R 0532 | 1R5 K 4 W | | 368-17204 |
| R 0542 | 10K J 4 W | | 368-14686 |
| R 0544 | 390K K 0411 | | 365-47678.01 |
| R 0546 | 130K F 0204 | | 367-16961 |
| R 0547 | 4R7 J 0,5 W | | 368-10946 |
| R 0557 | 0R22 K 0309 | | 366-79506 |
| R 0561 | 1R5 K 0309 | | 366-17899 |
| R 0566 | 4K7 F 0204 | | 367-17190 |

| POS.NR. ITEM NMB. | BESTELL-BEZEICHNUNG | DESCRIPTION | BESTELL-NUMMER LIST PART NMB. |
|---|---|---|---|
| | **WIDERSTÄNDE** | **RESISTORS** | |
| R 0571 | 560R G 0207 | | 367-20349 |
| R 0572 | 1K8 F 0204 | | 367-12201 |
| R 0573 | 1K8 F 0204 | | 367-12201 |
| R 0574 | 0R82 K 4 W | | 368-11091 |
| R 0576 | 22K F 0204 | | 367-11588 |
| R 0577 | 13K G 0207 | | 367-16240 |
| R 0578 | 68R G 0204 | | 367-15705 |
| R 0579 | 8K2 G 0204 | | 367-15707 |
| R 0583 | 100R F 0204 | | 367-15082 |
| R 0584 | 2K2 J 0204 | | 367-14878 |
| R 0586 | 10K F 0204 | | 367-16485 |
| R 0587 | 3K9 J 0204 | | 367-15708 |
| R 0588 | 8K2 G 0204 | | 367-15707 |
| R 0589 | 100K F 0204 | | 367-17812 |
| R 0591 | 3K3 F 0204 | | 367-14897 |
| R 0592 | 1K5 F 0204 | | 367-11503 |
| R 0593 | 5K6 J 0204 | | 367-14884 |
| R 0613 | 1R K 4 W | | 368-79913 |
| R 0619 | DUO-PTC-WIDERSTAND | | 372-73056 |
| R 0621 | 2K7 J 0617 | | 367-12723 |
| R 0622 | 4K M PTC-R | | 372-13349 |
| R 0627 | 270K G 0207 | | 367-15823 |
| R 0632 | 1K2 F 0204 | | 367-16202 |
| R 0633 | 12K G 0207 | | 367-16394 |
| R 0637 | 47R K 3 W | | 368-14191 |
| R 0639 | 10M J 0411 | | 367-19664 |
| R 0668 | 18K F 0204 | | 367-18527 |
| R 0669 | 4K7 F 0204 | | 367-17190 |
| R 0677 | 10K F 0204 | | 367-16485 |
| R 0678 | 10K F 0204 | | 367-16485 |
| R 0681 | 33R J 0309 | | 366-20128 |
| R 0686 | 0R1 K 0207 | | 366-10905 |
| R 0687 | 0R1 K 0207 | | 366-10905 |
| R 0688 | 3R3 K 17 W | | 368-47941 |
| R 7101 | 0R22 K 0207 | | 366-72845 |
| R 7108 | 4R7 K 0207 | | 366-18416 |
| R 7111 | 4R7 K 0207 | | 366-18416 |
| R 8401 | 22R J 0207 | | 366-79915 |
| R 8402 | 22R J 0207 | | 366-79915 |
| | **KONDENSATOREN** | **CAPACITORS** | |
| | 47P 63 V | | 357-46102 |
| | 56P 63 V | | 357-48654 |
| | 1000U 40V | | 360-80167 |
| | 100P 63 V | | 357-42786 |
| | 1U 50V | | 359-10095.020 |
| | 1U 50 V | | 360-80618 |
| | 2200U 35V | | 360-77756 |
| | 180P 63 V | | 357-11345 |
| C 0312 | 10U 16V BP | | 360-13810.020 |
| C 0314 | 4U7 16V BP | | 360-79039 |
| C 0316 | 27P 63 V | | 357-49571 |

## ARTIKEL: 52431 — CONCEPT PLUS 7000

| POS.NR. ITEM NMB. | BESTELL-BEZEICHNUNG | DESCRIPTION | BESTELL-NUMMER LIST PART NMB. |
|---|---|---|---|
| | **KONDENSATOREN** | **CAPACITORS** | |
| C 0358 | 220U 16V | | 360-13949 |
| C 0362 | 22N 2000 V | | 357-22266 |
| C 0485 | 22P 63 V | | 357-50756 |
| C 0536 | 10N 3,5% 1,5KV | | 359-80747 |
| C 0539 | 1N5 1600 V | | 359-19973 |
| C 0544 | 1N5 20% 2 KV | | 359-18719 |
| C 0558 | 2200U 40V | | 360-18117 |
| C 0612 | 220N 250VW | | 359-77769 |
| C 0613 | 150N 250VW | | 359-11322 |
| C 0619 | 100N 250VW | | 359-71061 |
| C 0626 | 2N2 1000V | | 359-11894 |
| C 0634 | 1U 63V | | 360-75974 |
| C 0639 | 3N3 400 VW | | 357-12003 |
| C 0650 | 1N 1 KV | | 357-73102 |
| C 0672 | 2200U 25V | | 360-15762 |
| | **SICHERUNGEN** | **FUSES** | |
| S 0611 | 2,5 A 250V 5X20 | | 380-45568 |
| S 0656 | 1,25 A 250V | | 380-17123.020 |
| S 0661 | 2,0 A 250V 8X8 | | 380-16779.020 |
| S 0671 | 6,3 A 250V 8X8 | | 380-15727.020 |
| | **VERBINDUNGSLEITUNG** | **CONNECTING CABLES** | |
| | NETZKABEL SCHWARZ 2250 MM LG.LÖTBAR | POWER CORD | 170-73310.051 |
| | **GEHÄUSETEILE** | **CABINET MOUNTING** | |
| | SCHAUMSTOFF-EINLAGE SCHWARZ-F.ZIERGITTER | INSERT | 411-84652.001 |
| | SCHAUMSTOFF-EINLAGE BEIGE F.ZIERGITTER | INSERT | 411-84652.002 |
| | RÜCKWANDSCHRAUBE M ,0X10 SW 8,6-KT. | SCREW | 434-78562.003 |
| | SCHRAUBE 7X40 VZKT. F.BILDROHRBEFESTIG. | SCREW | 440-18058 |
| | DISTANZSTÜCK F.BILDROHRBEFESTG. | SPACER PIECE | 503-17983 |
| | DISTANZSTÜCK FÜR GEH.VORDERT./BILDR.- | SPACER PIECE | 503-84629.001 |
| | TRÄGER/BEDIENUNG | SUPPORTER | 541-84566.012 |
| | TRÄGER/BEDEINUNG | SUPPORTER | 541-84566.013 |
| | TRÄGER/BEDIENUNG SCHWARZ | SUPPORTER | 541-84566.015 |
| | GEWINDELASCHE M4 F.CHASSISHALTER | THREAD STRAP | 561-81547.101 |
| | KLEMMSTÜCK F.GEH.-UNTERTEIL | CLAMPING PIECE | 572-84579.001 |
| | VERSCHLUSS-STÜCK F.RÜCKWANDHALTER | FASTENER PIECE | 575-83567.001 |
| | VERSCHLUSS-BOLZEN F.RÜCKWAND | FASTENER BOLT | 576-83568.001 |
| | HALTER/RW | HOLDER | 602-84578.011 |
| | INFRAROT-FENSTER | WINDOW | 666-84571.001 |
| | ABDECKUNG(GEH.BODEN) F.LAUTSPRECHER-FACH | COVER | 703-84577.001 |
| | KLAPPE DUNKELGRAU | DOOR ASSY. | 706-84567.002 |
| | KLAPPE SCHWARZ | DOOR ASSY. | 706-84567.005 |
| | KLAPPE HELLGRAU | DOOR ASSY. | 706-84567.003 |
| | ZIERGITTER DUNKELGRAU | ORNAMENTAL GRILLE | 708-84575.002 |
| | ZIERGITTER HELLGRAU | ORNAMENTAL GRILLE | 708-84575.003 |
| | ZIERGITTER SCHWARZ | ORNAMENTAL GRILLE | 708-84575.005 |

| POS.NR. ITEM NMB. | ARTIKEL: 52431 BESTELL-BEZEICHNUNG | CONCEPT PLUS 7000 DESCRIPTION | BESTELL-NUMMER LIST PART NMB. |
|---|---|---|---|
| | **GEHÄUSETEILE** | **CABINET MOUNTING** | |
| | GEHÄUSE-UNTERTEIL HELLGR.M.ZIERGITTER | CABINET LOWER PART | 750-90150.999 |
| | GEHÄUSE-UNTERTEIL DKL-GRAU M.ZIERGITT. | CABINET LOWER PART | 750-90154.904 |
| | GEHÄUSE-UNTERTEIL SCHWARZ M.ZIERGITTER | CABINET LOWER PART | 750-90178.950 |
| | GEHÄUSE-VORDERTEIL SCHWARZ MONTAGESATZ | CABINET FRONT | 750-90209.908 |
| | GEHÄUSE-VORDERTEIL H.GRAU MONTAGESATZ | CABINET FRONT | 750-90209.927 |
| | GEHÄUSE-VORDERTEIL DKL.GRAU MONTAGESATZ | CABINET FRONT | 750--90209.946 |
| | RÜCKWAND DUNKELGRAU 28" | REAR PANEL | 775-84586.012 |
| | RÜCKWAND HELLGRAU 28" | REAR PANEL | 775-84586.013 |
| | RÜCKWAND SCHWARZ 28" | REAR PANEL | 775-84586.015 |
| | GLEITER FARBLOS | SLIDER | 783-82251.005 |
| | LAUTSPRECHER 8 OHM 10W | LOUDSPEAKER | 272-84489 |
| | BILDRÖHRE "PH" A66-EAK252X01 28" | PICTURE TUBE | 345-22670 |
| | **KNÖPFE** | **BUTTONS** | |
| | KNOPF F. TASTER | BUTTON | 682-84568.001 |
| | KNOPF F.NETZSCHALTER | BUTTON | 682-84569.001 |
| | **ALLGEM.MECHAN.TEILE** | **COMMON MECHANICAL PARTS** | |
| | GLIMMERSCHEIBE 21X11 | MICA WASHER | 421-10881 |
| | KABELKLEMMHALTER M.STECKFUSS | CABLE SUPPORT | 530-81707.001 |
| | STÜTZE,S-VHS-BUCHSE | SUPPORT | 551-82022.001 |
| | WIDERSTANDSHALTER | RESISTOR HOLDER | 602-19586 |
| | WIDERSTANDSHALTER | RESISTOR HOLDER | 602-23398.111 |
| | HALTER FÜR DIODE | HOLDER | 602-84535.011 |
| | ABDECKUNG,NETZ OBEN AM CHASSIS SEITLICH | COVER | 703-83527.011 |
| | ABDECKUNG/TUNERBUCHSE | COVER | 703-83529.011 |
| | MONTAGECLIP 6MM F.I561,T534,I611 | CLAMP CLIPS | 739-10230 |
| | MONTAGECLIP 3MM F.T663,D671,T534 | CLAMP CLIPS | 739-82691.001 |
| | **DRUCKSACHEN** | **OPERATING INSTRUCTIONS** | |
| | SERV.KURZANLTG.C9003 M.NEUEN BEDIENTEILEN | SERVICE INSTRUCTIONS | 230-22601 |
| | BED.ANLTG. D-I-F-GB C9003 CONCEPT | OPERATING INSTRUCT. | 233-19558.005 |
| | BED.KURZANLEITUNG -D/GB/I/F- C9003 | OPERATING INSTRUCT. | 233-20147.001 |
| | **GERÄTEBEIPACK** | **SET SUPPLEMENTS** | |
| U 91 11 | MIKROZELLE 1,5V IEC LR 03 | BATTERY | 280-13411.001 |
| | IR-GEBER KPL. FB 300 LOEWE. | TRANSMITTER | 263-85000.050 |
| | ANTENNENKABEL 1800LG.SCHWARZ | ANTENNA CABLE | 169-84674.001 |
| | **VERPACKUNGSMATERIAL** | **PACKING MATERIAL** | |
| | VERPACKUNGSKARTON LO-DRUCK | PACKING | 245-84589.002 |
| | PACKSCHALENSATZ | POLYFOAM PACK.PARTS | 252-84587.050 |

## ARTIKEL: 52431 — CONCEPT PLUS 7000

| POS.NR. ITEM NMB. | BESTELL-BEZEICHNUNG | DESCRIPTION | BESTELL-NUMMER LIST PART NMB. |
|---|---|---|---|
| | **VERPACKUNGSMATERIAL** | **PACKING MATERIAL** | |
| | SCHUTZSTREIFEN 1200 X 800 MM | PROTECTIVE STRIP | 253-84666.001 |
| | SCHUTZSTREIFEN 350 X 160 MM (IR-G.) | PROTECTIVE STRIP | 253-84666.004 |
| | **GEBER-ERSATZTEILE** | **SPARE PARTS FOR TRANSMITTER** | |
| C 9101 | ELKO 1000U N 10V AA 8,7X21 | ELECTROLYT CAPACITOR | 360-12359 |
| D 9123 | DIODE TSUS 5222 | DIODE | 353-17924 |
| | IR-FENSTER | WINDOW | 666-84526.001 |
| | GEHÄUSEUNTERTEIL | CABINET LOWER PART | 756-84523.001 |
| | GEHÄUSE-OBERTEIL | CABINET UPPER PART | 756-84524.002 |
| | BATTERIEDECKEL BEDR.LOEWE. | BATTERY LID | 756-84525.005 |
| Q 9111 | KERAM.FILTER 429,0 KHZ | CERAMIC FILTER | 386-18622 |
| | KONTAKTMATTE | CONTACT MAT | 309-84527.011 |
| | BATTERIEFEDER 1-FACH | BATTERY SPRING | 739-85278.001 |
| | BATTERIEFEDER 2-FACH | BATTERY SPRING | 739-85279.001 |

## ARTIKEL: 85030.134/.135/.136 ST-CHASSIS VT/8MHZ/ST.BG

| POS.NR. ITEM NMB. | BESTELL-BEZEICHNUNG | DESCRIPTION | BESTELL-NUMMER LIST PART NMB. |
|---|---|---|---|
| | **TRANSISTOREN** | **TRANSISTORS** | |
| T 0292 | BC 547 B | | 346-74983 |
| T 0294 | BC 547 B | | 346-74983 |
| T 0381 | BC 547 B | | 346-74983 |
| T 0387 | BC 547 B | | 346-74983 |
| T 0388 | BC 547 B | | 346-74983 |
| T 0392 | BC 557 B | | 346-74878 |
| T 0393 | BC 557 B | | 346-74878 |
| T 0431 | BC 547 B | | 346-74983 |
| T 0432 | BC 547 B | | 346-74983 |
| T 0454 | BC 547 C | | 346-79589 |
| T 0459 | BC 547 C | | 346-79589 |
| T 0462 | BC 547 B | | 346-74983 |
| T 0464 | BC 547 B | | 346-74983 |
| T 0485 | BC 547 B | | 346-74983 |
| T 0494 | BC 557 B | | 346-74878 |
| T 0495 | BC 547 B | | 346-74983 |
| T 0496 | BC 639 | | 346-75622 |
| T 0498 | BC 639 | | 346-75622 |
| T 0501 | BC 547 B | | 346-74983 |
| T 0504 | BC 547 B | | 346-74983 |
| T 0510 | BC 547 B | | 346-74983 |
| T 0522 | BC 547 B | | 346-74983 |
| T 0525 | BC 547 B | | 346-74983 |
| T 0526 | BD 139/16 M.FER.PERLE | | 346-15826.050 |
| T 0534 | S 2000 AF | | 346-16204 |
| T 0554 | BC 547 B | | 346-74983 |
| T 0583 | BC 547 B | | 346-74983 |
| T 0587 | BC 557 B | | 346-74878 |
| T 0593 | BC 546 B | | 346-74968 |
| T 0594 | BD 537 | | 346-77764 |
| T 0624 | S 2000 AF | | 346-16203 |
| T 0663 | BUZ 71AF1 | | 346-18528 |
| T 0674 | BUZ 71AF1 | | 346-18528 |
| T 0692 | BC 557 B | | 346-74878 |
| T 0694 | BC 547 B | | 346-74983 |
| T 0697 | BC 557 B | | 346-74878 |
| | **INTEGR.SCHALTUNGEN** | **INTEGRATED CIRCUITS** | |
| I 0211 | X24C16P PROGR.F407 | FÜR CHASS.VAR.134/135 | 349-90535.407 |
| I 0211 | X24C16P PROGR.F427 | FÜR CHASS.VAR.136 | 349-90535.427 |
| I 0311 | TEA 2124 | | 349-19865 |
| I 0321 | VCU 2136-19/23/39/46 | | 349-18444 |
| I 0341 | SPU 2243-14 | FÜR CHASS.VAR.136 | 349-21131 |
| I 0351 | ACVP 2205-25/26 | | 349-21121 |
| I 0361 | DTI 2223-14 | | 349-18371 |
| I 0371 | MCU 2600-56 | | 349-15714 |
| I 0401 | 78 L 05 ACP | | 349-15209 |
| I 0421 | ADC 2311-17/26 | | 349-18639 |
| I 0441 | APU 2471 05/13 | | 349-18227 |
| I 0474 | TDA 2030 A | | 349-15866 |
| I 0484 | TDA 2030 A | | 349-15866 |
| I 0511 | DPU 2553-25 | | 349-21374 |

## ARTIKEL: 85030.134/.135/.136 ST-CHASSIS VT/8MHZ/ST.BG

| POS.NR. ITEM NMB. | BESTELL-BEZEICHNUNG | DESCRIPTION | BESTELL-NUMMER LIST PART NMB. |
|---|---|---|---|
| | **INTEGR.SCHALTUNGEN** | **INTEGRATED CIRCUITS** | |
| I 0561 | TDA 8175 | | 349-15721 |
| I 0611 | TDA 4600-2/TDA 4601 | | 349-10055 |
| I 0666 | TL 431 CLP | | 349-18230.020 |
| I 0676 | TL 431 CLP | | 349-18230.020 |
| I 0681 | 78 L 05 ACP | | 349-15209 |
| | **DIODEN** | **DIODES** | |
| D 0206 | ZPD 30 | | 352-15763 |
| D 0211 | BZX 79 B 5V6 | | 352-11683 |
| D 0290 | 1 N 4148 | | 352-31818 |
| D 0291 | 1 N 4148 | | 352-31818 |
| D 0292 | BZX 79 C 9V1 | | 352-76387 |
| D 0295 | 1 N 4148 | | 352-31818 |
| D 0329 | ZPD 5/1 | | 352-13139 |
| D 0356 | 1 N 4148 | | 352-31818 |
| D 0436 | ZP 12 | FÜR CHASS.VAR.134 | 352-44202 |
| D 0437 | ZP 12 | FÜR CHASS.VAR.134 | 352-44202 |
| D 0438 | ZP 12 | FÜR CHASS.VAR.134 | 352-44202 |
| D 0439 | ZP 12 | FÜR CHASS.VAR.134 | 352-44202 |
| D 0440 | 1 N 4148 | | 352-31818 |
| D 0441 | 1 N 4148 | | 352-31818 |
| D 0477 | RGP 10 | | 352-18460 |
| D 0478 | RGP 10 | | 352-18460 |
| D 0487 | RGP 10 | | 352-18460 |
| D 0488 | RGP 10 | | 352-18460 |
| D 0491 | 1 N 4148 | | 352-31818 |
| D 0492 | 1 N 4148 | | 352-31818 |
| D 0494 | 1 N 4148 | | 352-31818 |
| D 0499 | 1 N 4148 | | 352-31818 |
| D 0501 | 1 N 4148 | | 352-31818 |
| D 0502 | 1 N 4148 | | 352-31818 |
| D 0513 | 1 N 4148 | | 352-31818 |
| D 0514 | 1 N 4148 | | 352-31818 |
| D 0525 | 1 N 4148 | | 352-31818 |
| D 0526 | 1 N 4148 | | 352-31818 |
| D 0536 | BY 228 | | 352-10834 |
| D 0537 | BYW 96-D | | 352-21059 |
| D 0542 | BA 157 | | 352-44799 |
| D 0543 | BY 269 | | 352-18692 |
| D 0547 | PLR 817 | | 352-79586 |
| D 0557 | PLR 817 | | 352-79586 |
| D 0561 | 1 N 4001 | | 352-47247 |
| D 0562 | 1 N 4148 | | 352-31818 |
| D 0563 | 1 N 4148 | | 352-31818 |
| D 0613 | B 380 C1500 SKB | | 354-12667 |
| D 0622 | BYW 96-D | | 352-21059 |
| D 0624 | 1 N 4007 | | 352-79585 |
| D 0636 | BYW 96-D | | 352-21059 |
| D 0651 | BYW 96-D | | 352-21059 |
| D 0656 | BA 157 | | 352-44799 |
| D Q661 | BYW 98-100 CI STM | | 352-20535 |
| D 0663 | ZPD 12 | | 352-44202 |

## ARTIKEL: 85030.134/.135/.136 ST-CHASSIS VT/8MHZ/ST.BG

| POS.NR. ITEM NMB. | BESTELL-BEZEICHNUNG | | | DESCRIPTION | BESTELL-NUMMER LIST PART NMB. |
|---|---|---|---|---|---|
| | **DIODEN** | | | **DIODES** | |
| D 0665 | 1 N 4148 | | | | 352-31818 |
| D 0671 | BYS 26/45 | | | | 352-12657 |
| D 0686 | BY 398 | | | | 352-11109 |
| D 0687 | BY 398 | | | | 352-11109 |
| | **SPULEN** | | | **COILS** | |
| L 0528 | TREIBERSPULE | | | DRIVER COIL | 297-12134 |
| L 0531 | ZEILENTRAFO | | | LINE TRANSFORMER | 276-20695 |
| L 0541 | LINEARITÄTSREGLER | | | LINE REGULATOR | 278-20366 |
| L 0639 | WANDLERTRAFO | | | TRANSDUCER TRANSFORM. | 490-19994 |
| | **QUARZE** | | | **QUARTZES** | |
| Q 0374 | 17,73448 MHZ | | | | 385-15726 |
| Q 0376 | 14,31818 MHZ | | FÜR CHASS.VAR.136 | | 385-15725 |
| | **BUCHSEN,FASSUNGEN** | | | **SOCKETS** | |
| | IC-FASSUNG 24-POL. | | | IC-SOCKET | 320-80469 |
| | IC-FASSUNG 40-POL. | | | IC-SOCKET | 320-80502 |
| | IC-FASSUNG 8-POL. | | | IC-SOCKET | 320-80503 |
| | SICHERUNGSHALTEFEDER | | | FUSEHOLDER SPRING | 730-21447 |
| W 0323 | SCART-BUCHSE 21-POL. | | | SCART-SOCKET | 323-11799 |
| W 0479 | LAUTSPRECHERBUCHSE | | | SPEAKER SOCKET | 323-49752 |
| W 0489 | LAUTSPRECHERBUCHSE | | | SPEAKER SOCKET | 323-49752 |
| | **POTENTIOMETER** | | | **POTENTIOMETERS** | |
| P 0311 | 100R | | | | 375-18867 |
| P 0388 | 2K2 | | | | 375-15652 |
| P 0413 | 10K | | | | 375-20098 |
| P 0633 | 4K7 | | | | 375-15658 |
| | **WIDERSTÄNDE** | | | **RESISTORS** | |
| R 0206 | 22K | J | | | 367-19671 |
| R 0211 | 39R | J | 0207 | | 367-18358 |
| R 0326 | 39R | J | 0207 | | 367-18358 |
| R 0327 | 39R | J | 0207 | | 367-18358 |
| R 0328 | 39R | J | 0207 | | 367-18358 |
| R 0403 | 10R | K | 0207 SI ⚠ | | 366-74368 |
| R 0466 | 330R | K | 4W | | 368-18246 |
| R 0468 | 330R | K | 4W | | 368-18246 |
| R 0479 | 1R | J | 0204 | | 366-11219 |
| R 0489 | 1R | J | 0204 | | 366-11219 |
| R 0491 | 10R | J | 0207 | | 367-18080 |
| R 0516 | 1K | F | 0204 | | 367-17134 |
| R 0521 | 3R3 | K | 0207 SI ⚠ | | 366-11790 |
| R 0522 | 100R | F | 0204 | | 367-15082 |
| R 0524 | 150R | G | 0207 | | 367-18079 |
| R 0528 | 68R | K | 4W | | 368-10945 |

## ARTIKEL: 85030.134/.135/.136 ST-CHASSIS VT/8MHZ/ST.BG

| POS.NR. ITEM NMB. | BESTELL-BEZEICHNUNG | | DESCRIPTION | BESTELL-NUMMER LIST PART NMB. |
|---|---|---|---|---|
| | **WIDERSTÄNDE** | | **RESISTORS** | |
| R 0531 | 10R | K | 9W | 368-18616 |
| R 0532 | 1R5 | K | 4W | 368-17204 |
| R 0542 | 10K | J | 4W | 368-14686 |
| R 0544 | 390K | K | 0411 | 365-47678.021 |
| R 0546 | 130K | F | 0204 | 367-16961 |
| R 0547 | 4R7 | J | 0/5W SI ⚠ | 368-10946 |
| R 0557 | 0R22 | K | 0309 SI ⚠ | 366-79506 |
| R 0561 | 1R5 | K | 0309 SI ⚠ | 366-17899 |
| R 0566 | 4K7 | F | 0204 | 367-17190 |
| R 0571 | 560R | G | 0207 | 367-20349 |
| R 0572 | 1K8 | G | 0204 | 367-12201 |
| R 0573 | 1K8 | G | 0204 | 367-12201 |
| R 0574 | 0R82 | K | 4W | 368-11091 |
| R 0576 | 22K | F | 0204 | 367-11588 |
| R 0577 | 13K | G | 0207 | 367-16240 |
| R 0578 | 68R | G | 0204 | 367-15705 |
| R 0579 | 8K2 | G | 0204 | 367-15707 |
| R 0583 | 100R | F | 0204 | 367-15082 |
| R 0584 | 2K2 | J | 0204 | 367-14878 |
| R 0586 | 10K | F | 0204 | 367-16485 |
| R 0587 | 3K9 | J | 0204 | 367-15708 |
| R 0588 | 8K2 | G | 0204 | 367-15707 |
| R 0589 | 100K | F | 0204 | 367-17812 |
| R 0591 | 3K3 | F | 0204 | 367-14897 |
| R 0592 | 1K5 | F | 0204 | 367-11503 |
| R 0593 | 5K6 | J | 0204 | 367-14884 |
| R 0613 | 1R | K | 4W | 368-79913 |
| R 0619 | | | DUO-PTC | 372-73056 |
| R 0621 | 2K7 | J | 0617 | 367-12723 |
| R 0622 | 4K | M | PTC | 372-13349 |
| R 0623 | 0R47 | K | 0207 | 366-18159 |
| R 0627 | 270K | G | 0207 | 367-15823 |
| R 0632 | 1K2 | F | 0204 | 367-16202 |
| R 0633 | 12K | G | 0207 | 367-16394 |
| R 0637 | 47R | K | 3W SI ⚠ | 368-14191 |
| R 0639 | 10M | J | 0411 | 367-19664 |
| R 0668 | 18K | F | 0204 | 367-18527 |
| R 0669 | 4K7 | F | 0204 | 367-17190 |
| R 0677 | 10K | F | 0204 | 367-16485 |
| R 0678 | 10K | F | 0204 | 367-16485 |
| R 0681 | 33R | J | 0309 SI ⚠ | 366-20128 |
| R 0686 | 0R1 | R | 0207 SI ⚠ | 366-10905 |
| R 0687 | 0R1 | K | 0207 SI ⚠ | 366-10905 |
| R 0688 | 3R3 | K | 17W | 368-47941 |
| | **KONDENSATOREN** | | **CAPACITORS** | |
| C 0312 | 10U 16V BP | | FÜR CHASS.VAR.135/136 | 360-13810.020 |
| C 0314 | 4U7 16 V BP | | | 360-79039 |
| C 0316 | 27P 63V | | | 357-49571 |
| C 0342 | 100P 63V | | | 357-42786 |
| C 0343 | 100P 63V | | | 357-42786 |
| C 0344 | 100P 63V | | | 357-42786 |

# ARTIKEL: 85030.134/.135/.136 ST-CHASSIS VT/8MHZ/ST.BG

| POS.NR. ITEM NMB. | BESTELL-BEZEICHNUNG | | DESCRIPTION | BESTELL-NUMMER LIST PART NMB. |
|---|---|---|---|---|
| | **KONDENSATOREN** | | **CAPACITORS** | |
| C 0356 | 47P 63V | | | 357-46102 |
| C 0357 | 47P 63V | | | 357-46102 |
| C 0370 | 56P 63V | | | 357-48654 |
| C 0416 | 100P 63V | | | 357-42786 |
| C 0422 | 180P 63V | | | 358-11345 |
| C 0423 | 180P 63V | | | 358-11345 |
| C 0432 | 1U 50V | | | 360-80618 |
| C 0434 | 1U 50V | | | 360-80618 |
| C 0466 | 2200U 35V | | | 360-77756 |
| C 0468 | 2200U 35V | | | 360-77756 |
| C 0475 | 22P 63V | | | 357-50756 |
| C 0485 | 22P 63V | | | 357-50756 |
| C 0513 | 56P 63V | | | 357-48654 |
| C 0524 | 1U 50V | | | 359-10095.020 |
| C 0536 | 10N 1500V | | | 359-80747 |
| C 0539 | 1N5 1600V | | | 359-19973 |
| C 0544 | 1N5 2000V | | | 359-18719 |
| C 0546 | 1U 50V | | | 359-10095.020 |
| C 0558 | 2200U 40V | | | 360-18117 |
| C 0561 | 1000U 40V | | | 360-80167 |
| C 0574 | 1000U 40V | | | 360-80167 |
| C 0576 | 1U 50V | | | 359-10095.020 |
| C 0577 | 1U 50V | | | 359-10095.020 |
| C 0612 | 220N 250VW | | | 359-77769 |
| C 0613 | 150N 250VW | | | 359-11322 |
| C 0619 | 100N 250VW | | | 359-71061 |
| C 0626 | 2N2 1000V | | | 359-11894 |
| C 0629 | 56P 63V | | | 357-48654 |
| C 0632 | 100P 63V | | | 357-42786 |
| C 0634 | 1U 63V | | | 360-75974 |
| C 0639 | 3N3 400VW | | | 357-12003 |
| C 0650 | 1N 1000VW | | | 357-73102 |
| C 0672 | 2200U 25V | | | 360-15762 |
| | **SICHERUNGEN** | | **FUSES** | |
| S 0611 | 2,5 A 250V T | 5X20 | | 380-45568 |
| S 0656 | 1,25 A 250V T | | | 380-17123.020 |
| S 0661 | 2,0 A 250V T | 8X8 | | 380-16779.020 |
| S 0671 | 6,3 A 250V T | 8X8 | | 380-15727.020 |
| | **MECHANISCHE BAUTEILE** | | **MECHANICAL PARTS** | |
| | GLIMMERSCHEIBE 21X11 | | MICA WASHER | 421-10881 |
| | WIDERSTANDSHALTER | | RESISTOR HOLDER | 602-19586 |
| | WIDERSTANDSHALTER | | RESISTOR HOLDER | 602-23398.111 |
| | ABDECKUNG,NETZ OBEN AM CHASSIS SEITLICH | | COVER POWER SIDE CHASSIS | 703-83527.011 |
| | ABDECKUNG/TUNERBUCHSE | | COVER | 703-83529.011 |
| | MONTAGECLIP 6MM F.I561,T534,I611 | | MOUNTING CLIPS | 739-10230 |
| | MONTAGECLIP 3MM F.T663,D671 | | MOUNTING CLIPS | 739-82691.001 |

## ARTIKEL: 85709.050 BEDIENTEILPLATTE

| POS.NR. ITEM NMB. | BESTELL-BEZEICHNUNG | DESCRIPTION | BESTELL-NUMMER LIST PART NMB. |
|---|---|---|---|
| | **DIODEN** | **DIODES** | |
| D 8206 | TLHR 4400 ROT | | 353-17887 |
| D 8207 | TLHG 4400 GRÜN | | 353-17888 |
| | **INTEGR.SCHALTUNGEN** | **INTEGRATED CIRCUITS** | |
| I 8016 | IR-EMPFÄNGER | IR-RECEIVER | 291-22155 |
| | **BUCHSEN** | **SOCKETS** | |
| W 8331 | MINI-DIN-BUCHSE | SOCKET | 323-18108 |
| W 8321 | CINCH-BUCHSE ROT | SOCKET | 323-17952 |
| W 8311 | CINCH-BUCHSE WEISS | SOCKET | 323-17954 |
| W 8461 | KOPFHÖRERBUCHSE | HEADPHONE SOCKET | 323-15966 |
| | **SCHALTER** | **SWITCHES** | |
| S 8028 | TASTER | SWITCH | 467-17895 |
| S 8029 | TASTER | SWITCH | 467-17895 |
| S 8056 | TASTER | SWITCH | 467-17895 |
| | **WIDERSTÄNDE** | **RESISTORS** | |
| R 8401 | 22R J 0207 SI ⚠ | | 366-79915 |
| R 8402 | 22R J 0207 SI ⚠ | | 366-79915 |
| | **MECHANISCHE BAUTEILE** | **MECHANICAL PARTS** | |
| | HALTER F.DIODE | HOLDER FOR DIODE | 602-84535.011 |

## ARTIKEL: 85841.050 BEDIENTEILPLATTE

| POS.NR. ITEM NMB. | BESTELL-BEZEICHNUNG | DESCRIPTION | BESTELL-NUMMER LIST PART NMB. |
|---|---|---|---|
| | **INTEGR.SCHALTUNGEN** | **INTEGRATED CIRCUITS** | |
| I 8016 | IR-EMPFÄNGER | | 291-22155 |
| | **DIODEN** | **DIODES** | |
| D 8206 | TLHR 4400 ROT | | 353-17887 |
| D 8207 | TLHG 4400 GRÜN | | 353-17888 |
| | **BUCHSEN** | **SOCKETS** | |
| | KOPFHÖRERBUCHSE | HEADPHONE SOCKET | 323-15966 |
| | **SCHALTER** | **SWITCH** | |
| S 8001 | TASTER FÜR C, - + | SWITCH | 467-17895 |
| S 8002 | TASTER FÜR C, - + | SWITCH | 467-17895 |
| S 8003 | TASTER FÜR C, - + | SWITCH | 467-17895 |
| S 8101 | NETZSCHALTER | POWER SWITCH | 471-84423 |
| | **WIDERSTÄNDE** | **RESISTORS** | |
| R 8401 | 22R J 0207 SI ⚠ | | 366-79915 |
| R 8402 | 22R J 0207 SI ⚠ | | 366-79915 |
| | **ALLGEM.MECH.BAUTEILE** | **COMM.MECHANICAL PARTS** | |
| | HALTER FÜR DIODE | HOLDER FOR DIODE | 602-84535.011 |

## ARTIKEL: 83616.063 BILDROHRPLATTE

| POS.NR. ITEM NMB. | BESTELL-BEZEICHNUNG | | | DESCRIPTION | BESTELL-NUMMER LIST PART NMB. |
|---|---|---|---|---|---|
| | **TRANSISTOREN** | | | **TRANSISTORS** | |
| T 0373 | BF 869 | | | | 346-18902 |
| T 0383 | BF 869 | | | | 346-18902 |
| T 0393 | BF 869 | | | | 346-18902 |
| | **FASSUNGEN** | | | **SOCKETS** | |
| | BILDROHRFASSUNG | | | PICTURE TUBE SOCKET | 320-16428 |
| | **POTENTIOMETER** | | | **POTENTIOMETERS** | |
| P 0362 | 2M2 | | | | 375-17337 |
| P 0368 | 22K | | | | 375-15659 |
| | **WIDERSTÄNDE** | | | **RESISTORS** | |
| R 0363 | 820R | K | 0411 | | 365-77681 |
| R 0365 | 1K5 | K | 0411 | | 365-77586 |
| R 0366 | 100R | J | 0309 SI ⚠ | | 366-17757 |
| R 0375 | 18K | G | 0207 | | 367-11559 |
| R 0376 | 560R | J | 0207 SI ⚠ | | 366-80643 |
| R 0378 | 820R | K | 0411 | | 365-77681 |
| R 0379 | 10K | G | 0207 | | 367-17551 |
| R 0385 | 18K | G | 0207 | | 367-11559 |
| R 0386 | 560R | J | 0207 SI ⚠ | | 366-80643 |
| R 0388 | 820R | K | 0411 | | 365-77681 |
| R 0389 | 10K | G | 0207 | | 367-17551 |
| R 0395 | 18K | G | 0207 | | 367-11559 |
| R 0396 | 560R | J | 0207 SI ⚠ | | 366-80643 |
| R 0398 | 820R | K | Q411 | | 365-77681 |
| R 0399 | 10K | G | 0207 | | 367-17551 |
| | **KONDENSATOREN** | | | **CAPACITORS** | |
| C 0362 | 22N | S | 2000 V | | 357-22266 |

## ARTIKEL: 84974.052 NICAM-DECODER-PLATTE

| POS.NR. ITEM NMB. | BESTELL-BEZEICHNUNG | DESCRIPTION | BESTELL-NUMMER LIST PART NMB. |
|---|---|---|---|
| | **DIODEN** | **DIODES** | |
| D 4118 | ZTE 2 V 4 | | 352-19455 |
| | **INTEGR.SCHALTUNGEN** | **INTEGRATED CIRCUITS** | |
| I 4361 | AMU 2481-05/22/26 | | 349-18334 |
| | **KONDENSATOREN** | **CAPACITORS** | |
| C 4369 | 1U S 63 V | | 360-18155.020 |
| C 4370 | 1U S 63 V | | 360-18155.020 |
| | **WIDERSTÄNDE** | **RESISTORS** | |
| R 4100 | 1R K 0207 SI ⚠ | | 366-12276 |
| | **QUARZE** | **QUARTZES** | |
| Q 4151 | 18,432 MHZ | | 385-17316 |

## ARTIKEL: 85002.051 S-VHS-SCHNITTSTELLE

| POS.NR. ITEM NMB. | BESTELL-BEZEICHNUNG | DESCRIPTION | BESTELL-NUMMER LIST PART NMB. |
|---|---|---|---|
| | **TRANSISTOREN** | **TRANSISTORS** | |
| T 7111 | BC 337-25 | | 346-49912 |
| | **INTEGR.SCHALTUNGEN** | **INTEGRATED CIRCUITS** | |
| I 7121 | TEA 6415-A STM | | 349-19361 |
| I 7221 | TEA 6415-A STM | | 349-19361 |
| I 7321 | TEA 6420 STM | | 349-19362 |
| I 7323 | TEA 6420 STM | | 349-19362 |
| | **BUCHSEN** | **SOCKETS** | |
| W 7151 | SCART-BUCHSE 21-POL. | SCART-SOCKET | 323-11799 |
| W 7393 | CINCH-BUCHSE ROT | CINCH-SOCKET | 323-17952 |
| W 7398 | CINCH-BUCHSE WEISS | CINCH SOCKET | 323-17954 |
| | **WIDERSTÄNDE** | **RESISTORS** | |
| R 7101 | 0R22 K 0207 SI ⚠ | | 366-72845 |
| R 7108 | 4R7 K 0207 SI ⚠ | | 366-18416 |
| R 7111 | 4R7 K 0207 SI ⚠ | | 366-18416 |

## ARTIKEL: 85004.055 VT-DECODER

| POS.NR. ITEM NMB. | BESTELL-BEZEICHNUNG | DESCRIPTION | BESTELL-NUMMER LIST PART NMB. |
|---|---|---|---|
| | **INTEGR.SCHALTUNGEN** | **INTEGRATED CIRCUITS** | |
| I 7811 | TPU 2735-23/37 | | 349-18860 |
| I 7821 | 41256-15 | | 349-14819 |
| I 7836 | 27PC512 PROG.C-V1.14A | | 349-20100.058 |
| | **QUARZE** | **QUARTZES** | |
| Q 7833 | 4,0 MHZ | | 385-18331 |
| | **FASSUNGEN** | **SOCKETS** | |
| | IC-FASSUNG 32-POL. | SOCKET | 320-22087 |
| | IC-FASSUNG 40-POL. | SOCKET | 320-80502 |

## ARTIKEL: 85004.057 VT-DECODER

| POS.NR. ITEM NMB. | BESTELL-BEZEICHNUNG | DESCRIPTION | BESTELL-NUMMER LIST PART NMB. |
|---|---|---|---|
| | **INTEGR.SCHALTUNGEN** | **INTEGRATED CIRCUITS** | |
| I 7836 | 27PC512 PROG.C-V3.1A | | 349-18764.125 |

## ARTIKEL: 396-85442.101 — SAT-EMPFANGSEINHEIT III

| POS.NR. ITEM NMB. | BESTELL-BEZEICHNUNG | | | DESCRIPTION | BESTELL-NUMMER LIST PART NMB. |
|---|---|---|---|---|---|
| | **BAUGRUPPEN** | | | **UNITS** | |
| U 0199 | LTPL. SAT- EMPFANGSEINHEIT III<br>SAT-TUNER SXT 2001C | | | SAT RECEIVER P.C.B. | 396-85403.050<br>260-21145 |
| | **INTEGRIERTE SCHALTUNGEN** | | | **INTEGRATED CIRCUITS** | |
| I 0114 | LM 317 STM | | | | 349-18975 |
| | **STECKER** | | | **SOCKETS** | |
| | STECKER 4-POL. | | | PLUG | 326-21194 |
| | **WIDERSTÄNDE** | | | **RESISTORS** | |
| R 0113 | 18R | K | 7 W | | 368-21230 |
| R 0131 | 15K | J | | | 367-19989 |
| R 0132 | 15K | J | | | 367-19989 |
| R 0133 | 15K | J | | | 367-19989 |
| R 0134 | 15K | J | | | 367-19989 |
| | **ALLGEMEIN MECH. BAUTEILE** | | | **COMMON MECHANICAL PARTS** | |
| | LI-SCHRAUBE M. KREUZ M4,0X22 DIN 7985 | | | SCREW | 432-18896 |
| | SPAXSCHRAUBE 4X13 | | | SCREW | 443-18169 |
| | FÜR ROHRSCH. + FÜHRUNGR. | | | | |
| | FÜHRUNGSRAHMEN | | | FRAME FOR SAT RECEIVER | 549-84466.021T |
| | STÜTZE, S-VHS-BUCHSE | | | SUPPORT/S-VHS SOCKET | 551-82022.001 |
| | U. LTPL. BEDIEN. | | | & CONTROL UNIT | |
| | HALTER/SAT | | | HOLDER/SAT | 602-84823.101 |
| | MONTAGECLIP 3MM F.T663,D67 1 ,T534 | | | CLAMP CLIPS | 739-82691.001 |
| | **SERVICE-/BEDIENANLEITUNGEN** | | | **SERV./OPERATING INSTRUCTIONS** | |
| | SERV. KURZANLEITUNG<br>BA-D/GB/I/F/NL/E/S/<br>SAT/D2MAC/12MHZ | | | SERVICE INSTRUCTIONS<br>OPERATING INSTRUCTIONS | 230-21233<br>233-21231 |
| | **TRANSISTOREN** | | | **TRANSISTORS** | |
| T 0575 | BC 557 B | | | | 348-74878 |
| | **INTEGRIERTE SCHALTUNGEN** | | | **INTEGRATED CIRCUITS** | |
| I 0200 | TDA 8735 | | | | 349-21104 |
| I 0270 | NE 612 | | | | 349-21105 |
| I 0300 | TDA 8442 | | | | 349-21106 |
| I 0400 | TDA 8741 | | | | 349-21107 |
| I 0800 | U 3082 | | | | 349-21111 |
| I 0850 | LM 324 N | | | | 349-10861 |

## ARTIKEL: 396-85442.101

## SAT-EMPFANGSEINHEIT (III)

| POS.NR. ITEM NMB. | BESTELL-BEZEICHNUNG | | | DESCRIPTION | BESTELL-NUMMER LIST PART NMB. |
|---|---|---|---|---|---|
| | **SPULEN** | | | **COILS** | |
| K 0402 | KERAMIK FILTER 10,52 MHZ | | | CERAMIC FILTER | 386-21373 |
| K 0412 | KERAMIK FILTER 10,70 MHZ | | | CERAMIC FILTER | 386-17039 |
| | **QUARZE** | | | **QUARTZES** | |
| Q 0201 | 4,0 MHZ | | | | 385-15844 |
| | **BUCHSEN** | | | **SOCKETS** | |
| W 0810 | BUCHSEN STECKER 9-POL. | | | PLUG | 326-16954 |
| | **POTENTIOMETER** | | | **POTENTIOMETERS** | |
| P 0739 | 4K7 | | | | 375-15974 |
| P 0884 | 1K | | | | 375-18289 |
| | **KONDENSATOREN** | | | **CAPACITORS** | |
| C 0211 | 1U | M | 50 V | | 359-10095.020 |
| C 0435 | 1U | S | 50 V | | 360-80618 |
| C 0446 | 1U | S | 50 V | | 360-80618 |
| C 0569 | 10U | M | 16 V BP | | 360-13810.020 |
| C 0603 | 1U | M | 50 V | | 359-10095.020 |

| Ersatzteilbestellung: | |
|---|---|
| Btx: | *50705990# |
| Fax: | 09261/99413 |
| Telefon: | 09261/99422 |

| Reparaturhilfen: | |
|---|---|
| Btx: | *507058140# |
| Fax-Hotline: | 09261/99730 |
| Telefon-Hotline: | 09261/99700 |

**Hinweis!** *Ersatzteilbestellung nur über die Kundendienst-Zentrale W-8640 Kronach*

## LOEWE.-Vertragswerkstätten

| | | | | | |
|---|---|---|---|---|---|
| **W-1000** | VHF Fernsehdienst GmbH<br>Ulrich Capito<br>Grainauer Straße 18<br>Berlin 30<br>Tel: 030/2133006<br>Fax: 030/2133007 | **W-5000** | EWS Elektronik-Service<br>Dipl.-Ing. Fred Wenzel<br>Auf der Jüchen 2<br>Köln 80<br>Tel: 0221/6801585<br>Fax: 0221/6801588 | **O-2033** | Gerhard Schubert<br>Lange Reihe 38B<br>Loitz/Mecklenburg<br>Tel: 039998/577 |
| **W-2000** | Michael Hinz<br>Audio-Video-TV-Service<br>Billstraße 33<br>Hamburg 26<br>Tel: 040/7898989<br>Fax: 040/7898419 | **W-5400** | Hans Krempl / Haustechnik GmbH<br>August-Horch-Straße 14<br>Koblenz<br>Tel: 0261/8909-0<br>Btx: 0261/83074<br>Fax: 0261/83074 | **O-2539** | Wilhelm Meissner GmbH<br>Mühlenstraße 12<br>Warnemünde<br>Tel: 0381/52465 |
| **W-2090** | Video Electronic Service<br>Inh. Gerhard Will<br>Ilmer Moorweg 32<br>Winsen/Luhe<br>Tel: 04171/72074<br>Fax: 04171/77838 | **W-6200** | VAD Video- und Audio-Dienst<br>Ostring 7<br>Wiesbaden-Nordenstadt<br>Tel: 06122/12054, 12055<br>Fax: 06122/15603 | **O-5020** | Audio-Video-Elektrik<br>Service GmbH<br>Lange Brücke 35<br>Erfurt<br>Tel: 0361/26285 |
| **W-3000** | DW-Service GmbH<br>Haltenhoffstraße 52-54<br>Hannover 1<br>Tel: 0511/714073<br>Fax: 0511/7000997 | **W-7257** | Pavlek<br>Video & Femseh-Service<br>Max-Eydt-Straße 11<br>Ditzingen-Hirschlanden<br>Tel: 07156/39467, 39889<br>Fax: 07156/3680 | **O-7022** | HVS Lösbar GmbH<br>Coppistraße 81<br>Leipzig<br>Tel: 0341/5921 27<br>Fax: 0341/5645856 |
| **W-3501** | Fernseh-Eildienst<br>Kessler<br>Veckerhagener Straße 58<br>Fuldatal 1<br>Tel: 0561/813001, 813002, 813003<br>Fax: 0561/819185 | **W-8000** | Fernseh-Service<br>Wolfgang Appel - Jürgen Drössler<br>Lerchenstraße 8<br>München 50<br>Tel: 089/3517462, 3517467<br>Btx: 089/3517467 | **O-8029** | Elektro Dresden-West<br>Gesellschaft für Elektrotechnik GmbH<br>Gottfried-Keller-Straße 87<br>Dresden<br>Tel: 0351/434157 |
| **W-4600** | HVS Lösbar GmbH<br>Planetenfeldstr. 24-30<br>Dortmund 1<br>Tel: 0231/178000, 170000, 170110<br>Fax: 0231/179090 | **W-8500** | Norbert Nickl<br>KopernikusstraBe 21/23<br>Nürnberg 40<br>Tel: 0911/4466460<br>Btx: 0911/4466460<br>Fax: 0911/4466414 | | |

## LOEWE.-Werkvertretung

| | |
|---|---|
| **W-8500** | Fa. Walter Gehrmann<br>Kopernikusstraße 21/23<br>Nürnberg 40<br>Tel: 0911/45645<br>Btx: 0911/45645<br>Fax: 0911/4572 70 |

## LOEWE.-Niederlassungen

| | | | | | |
|---|---|---|---|---|---|
| **W-1000** | LOEWE OPTA GmbH<br>Siemensstr. 40/41<br>Berlin<br>Tel: 030/771 80-29<br>Btx: 030/771 8095<br>Fax: 030/771 8003 | **W-4600** | LOEWE OPTA GmbH<br>Markt 5<br>Dortmund 1<br>Tel: 0231/527500<br>Fax: 0231/579305<br>Btx: 02 31/6 55 03 34 | **W-8000** | LOEWE OPTA GmbH<br>Lerchenstraße 8<br>München 50<br>Tel: 089/35 48 08 23<br>Btx: 089/35 48 08<br>Fax: 089/35 48 08-24 |
| **W-3002** | LOEWE OPTA GmbH<br>Niederlassung Mellendorf<br>Wedemarkstraße 85<br>Wedemark (Hannover)<br>Tel: 0530/58951<br>Fax: 0530/58951 | **W-6070** | LOEWE OPTA GmbH<br>Robert-Bosch-Str. 5<br>Langen (Frankfurt)<br>Tel: 06103/75 01-34<br>Btx: 06103/75 01<br>Fax: 06103/75 01 49 | **W-8640** | LOEWE OPTA GmbH<br>Kundendienst-Zentrale<br>Kronach<br>Tel: 09261/99700<br>Fax: 09261/99730 |

## Anordnung der SERVICE-Mode-Befehle auf der Fernbedienung
## Ordine dei comandi di SERVICE mode sul telecomando
## Arrangement of the SERVICE mode commands on the remote control
## Arrangement des instructions du mode SERVICE sur la télécommande

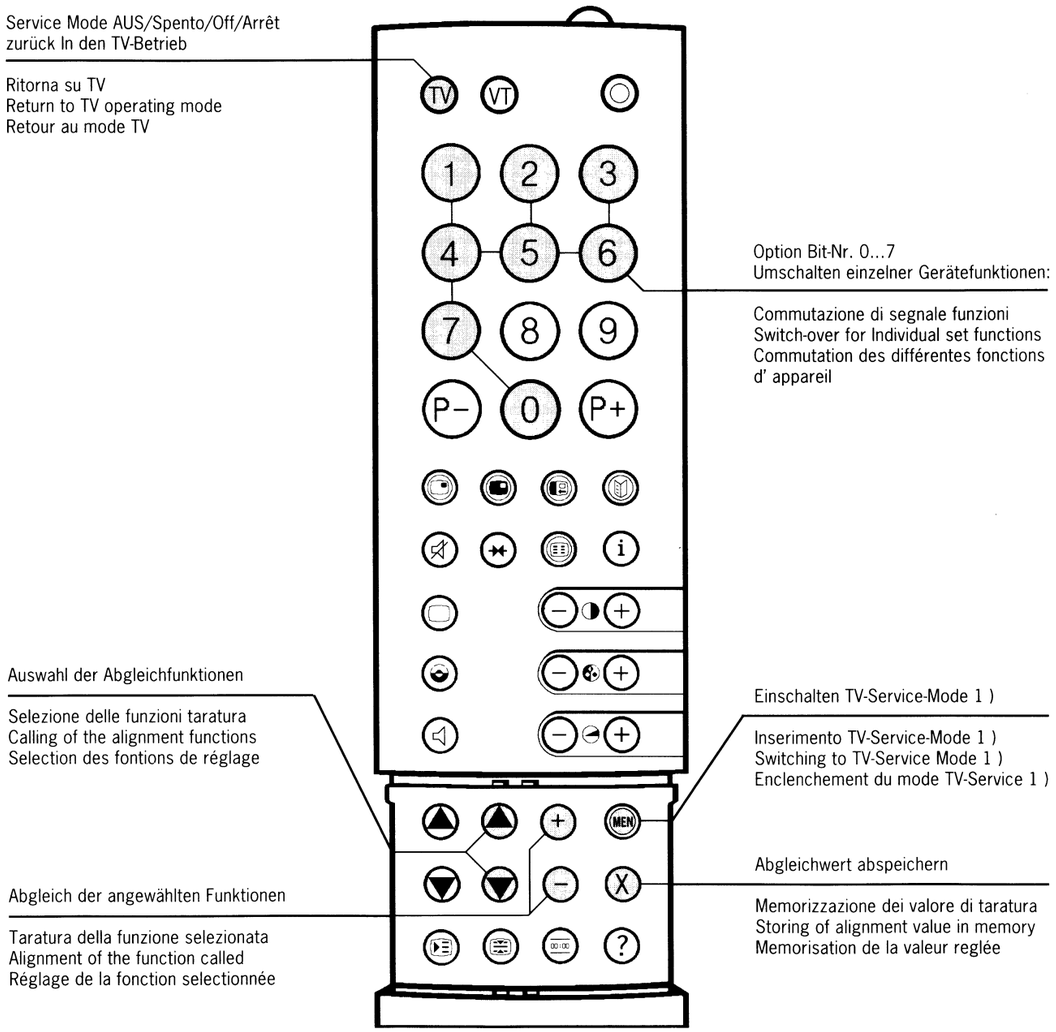


**1 ) Funktionstaste ↻ auf der Ortsbedienung fünfmal drücken (Anzeige „Service“ erscheint), anschließend innerhalb 1 sec. Taste „MEN” auf der Fernbedienung drücken.**
**1 ) Su comando locale premere cinque volte il tasto funzione ↻ (indicatori „Service“ appare), successivo centro uno sec. premere il tasto „MEN” con il telecomando.**
**1 ) On the local control press function key ↻ five times (indication „Service“ will appear), afterwards within a sec. press key „MEN” on the remote control.**
**1 ) Poussez cinq fois la touche function ↻ sur la commande locale (indication „Service“ appareît), suivant en une sec. poussez la touche „MEN” sur la télécommande.**



## Option Bytes-Tabelle / Tabella / Table / Tableau

| Abgleichfunktion<br>Funzione di comp.<br>Alignementfunction<br>Fonction d'alignement | Bit.-Nr.<br>n.<br>no. | Bedeutung<br>Significato<br>Meaning<br>Signification | "0" | "1" | Einstellung ab Werk<br>Registratione in fabbrica<br>Adjusted in the factory<br>Réglage en usine |
|---|---|---|---|---|---|
| **Option Byte 1** | **0** | D2 MAC Zeilenverkopplung<br>Accoppiamento righe D2-MAC<br>D2-MAC line coupling<br>Accouplement lignes D2-MAC | aus<br>spento<br>off<br>arrêt | ein<br>inserito<br>on<br>marche | **0** |
| | **1** | VPU Bestückung<br>Equipaggiamento VPU<br>VPU Equipment<br>Équipement VPU | I 351<br>VPU2204 | I 351<br>ACVP2205 | **1** |
| | **2** | Abschaltautomatik<br>Spento automatico<br>Automatic switch-off<br>Arrêt automatique | aus<br>spento<br>off<br>arrêt | ein<br>inserito<br>on<br>marche | **1** |
| | **3** | Fabrik-Mode<br>Modo in fabbrica<br>Factory operation<br>Service de fabrique | aus<br>spento<br>off<br>arrêt | ein<br>inserito<br>on<br>marche | **0** |
| | **4** | Chroma Filter<br>Filtro croma<br>Chrominance filter<br>Filtre chroma | symmetrisch<br>simmetrico<br>symmetrical<br>symétrique | asymmetrisch (sym. bei VCR)<br>asimmetrico (simm. con VCR)<br>asymmetrical (sym at VCR)<br>asymétrique (sym. pour VCR) | **0** |
| | **5** | Nicam Ton<br>tono-nicam<br>Nicam-sound<br>Nicam-son | nicht bevorzugt<br>non preferito<br>not preferred<br>non préfére | bevorzugt<br>preferito<br>preferred<br>préfére | **0** |
| | **6** | S-Terminal bestückt<br>Terminale S equipaggiato<br>S terminal fitted (S-VHS)<br>Terminal S équipé | ja<br>si<br>yes<br>oui | nein<br>no<br>no<br>non | **1** |
| | **7** | Dunkeltastung<br>Oscuramento<br>Blanking<br>Suppressio | ein<br>inserito<br>on<br>marche | aus<br>spento<br>off<br>arrêt | **0** |
| **Option Byte 2** | **0** | **PAL-B/G** | gesperrt<br>bloccato<br>blocked<br>bloqué | zugelassen<br>ammesso<br>approved<br>autorisé | **1** |
| | **1** | **PAL-D/K** | gesperrt<br>bloccato<br>blocked<br>bloqué | zugelassen<br>ammesso<br>approved<br>autorisé | **1** |
| | **2** | **PAL-L** | gesperrt<br>bloccato<br>blocked<br>bloqué | zugelassen<br>ammesso<br>approved<br>autorisé | **1** |
| | **3** | **PAL-I** | gesperrt<br>bloccato<br>blocked<br>bloqué | zugelassen<br>ammesso<br>approved<br>autorisé | **1** |
| | **4** | **SECAM-B/G** | gesperrt<br>bloccato<br>blocked<br>bloqué | zugelassen<br>ammesso<br>approved<br>autorisé | **1** |
| | **5** | **SECAM-D/K** | gesperrt<br>bloccato<br>blocked<br>bloqué | zugelassen<br>ammesso<br>approved<br>autorisé | **1** |
| | **6** | **SECAM-L** | gesperrt<br>bloccato<br>blocked<br>bloqué | zugelassen<br>ammesso<br>approved<br>autorisé | **1** |
| | **7** | **D2-MAC** | gesperrt<br>bloccato<br>blocked<br>bloqué | zugelassen<br>ammesso<br>approved<br>autorisé | **1** |
| **Option Byte 3** | **0** | **NTSC-M** | gesperrt<br>bloccato<br>blocked<br>bloqué | zugelassen<br>ammesso<br>approved<br>autorisé | **1** |
| | **1** | **NTSC-Video** | gesperrt<br>bloccato<br>blocked<br>bloqué | zugelassen<br>ammesso<br>approved<br>autorisé | **1** |
| | **7** | **NTSC-SAT-Video** | gesperrt<br>bloccato<br>blocked<br>bloqué | zugelassen<br>ammesso<br>approved<br>autorisé | **1** |
| **Option Byte 4** | **0** | D2-MAC Fehlerauswertung<br>Valutazione errori D2-MAC<br>D2 MAC fault evaluation<br>Evaluación d'erreur D2-MAC | ein<br>inserito<br>on<br>marche | aus<br>spento<br>off<br>arrêt | **0** |
| | **1** | D2-MAC Kanaltabelle<br>Tabella canali D2-MAC<br>D2-MAC channel table<br>Tableau canal D2-MAC | französisch (8MHz)<br>francese (8MHz)<br>franco (8MHz)<br>française (8MHz) | deutsch (12MHz)<br>tedesco (12MHz)<br>german (12MHz)<br>allemand (12MHz) | **1** |
| | **2** | Bildschirm Format<br>Formato schermo<br>Picture screen format<br>Format écran de vision | 4 : 3 | 16 : 9 | **1** |
| | **3** | VT-Zeichensatz<br>Serie caratterie TV<br>Character set TT<br>Jeu de caractéres TT | normal<br>normale<br>normal<br>normal | modifiziert<br>modifyed<br>modificare<br>modifié | **0** |
| | **4** | V.-Austastung mit neuer DPU<br>Soppressione V con DPU nuovo<br>V blanking with new DPU<br>Suppression V avec nouvelle DPU | ja<br>si<br>yes<br>oui | nein<br>no<br>no<br>non | **1** |
| | **5** | V+HD Impuls (an CCU)<br>Impulso V e HD (su CCU)<br>V & HD pulse (to CCU)<br>Impulsion V et HD (à CCU) | normal<br>normale<br>normal<br>normal | invertiert<br>inverso<br>inverse<br>inversé | **1** |
| | **6** | V-Austastung (Zoom)<br>Soppressione (Zoom)<br>V blanking (Zoom)<br>Suppression V (Zoom) | ein<br>inserito<br>on<br>marche | aus<br>spento<br>off<br>arrêt | **0** |
| | **7** | RC5-Quittung<br>Quietanza RC5<br>RC5 acquittance<br>Quittance RC5 | sofort<br>subito<br>forthwith<br>aussitôt | verzögert<br>ritardato<br>delayed<br>retardé | **0** |

# Abgleich-Anweisung / Istruzioni Allineamento / Adjustment procedure / Instructions d'alignement

| Abgleich<br>Allineamento<br>Ajustment<br>Alignement | Signal<br>Segnale<br>Signal<br>Signal | Voraussetzung<br>Premesse<br>Coditions<br>Préalables | Meßp./Indik.<br>Pto. di mis/Indic.<br>Mst. point/Indic.<br>P. de mes./Indic. | Einstellung<br>Regolazione<br>Ajustments<br>Réglage | Einstellwerte/Besonderheiten<br>Particolarita della pos./Valori di pos.<br>Settings/special features<br>Valeurs de réglage/Particularités | Oszillogr./Bildschirmdarst.<br>Oscillogr./Illust. schermo<br>Oscillogr./screen display<br>Oscillogr./Repres. d'écran |
|---|---|---|---|---|---|---|
| Betriebsspannung<br>tensione d'esercizio<br>operating voltage<br>tension de service | Testbild<br>Immag. di prova<br>test pattern<br>Mire | 220/230 V ~<br>220/230 V ~<br>220/230 V ~<br>220/230 V ~ | Bildschirm<br>schermo<br>screen<br>écran $U_B$ | P 633 | 155 V ± 0,5 V<br>auf richtige hor. Amplitude achten<br>attenzione per ampiezza orriz.<br>pay attention to correct hor. amplitude<br>attention à la bonne amplitude horizontale | |
| Focus<br>foco<br>focus<br>focus | Testbild<br>Immagine d prova<br>test pattern<br>Mire | | Bildschirm<br>schermo<br>screen<br>écran | Focus am Zeilentrafo<br>foco su trasformatore righe<br>focus at line transformer<br>Focalisation sur le transfor. de ligne | Optimale Einstellung<br>Regolazione ottimale<br>Optimum setting<br>Réglage optimal | |
| Pilotton-Filter<br>filtro audio portante<br>pilot filter<br>filtro du son pilote | 54,7kHz-Signal über 47kΩ an 4b einspeisen<br>inserire segnale 54,7 kHz tramite resistenza 47 kΩ sui 4b<br>set 54,7 kHz signal 47 kΩ to 4b<br>alimenter un signal de 54,7 kHz dans 47 kΩ sur 4b | | 4a | L 418 | max. Spannung<br>tensione massima<br>max. tension<br>tension max. | min. |
| Matrix Abgleich<br>alineamento matrice<br>matrix adjustmant<br>matrice d'alignement | Stereo-Testsignal<br>Test-segnale stereo<br>stereo test signal<br>signal detest stéréo | linker Kanal ohne, rechter Kanal mit NF-Signal<br>canale sinistro senza, canale destro con segnale BF<br>left chanel without, right chanel with LF signal<br>canal gauche sans, canal droit avec signal BF | 4b | P 413 | Signalteile (Übersprechen) auf Minimum abgleichen<br>sintonizzare al minimo<br>adjust cross-talk to minimum<br>régler les parts des signaux (diaphoni) au minimum | |
| Strahlstrom-begrenzung<br>limit. corr. di raggio<br>beam current limitation<br>limit. courant de canon | Gitter-Testbild<br>Quadro prova a retino<br>grid test pattern<br>Mire en grille | P 388 Linksanschlag max.<br>P 388 buttata sinistra<br>P 388 right-hand stop<br>P 388 arrêt gauche | Katode mit max. Pegel<br>Catodo con il livello massimo<br>Cathode with max. level<br>Cathode avec max. niveau | P 388 | 110 Vss ±0,5 Vss BA | |

Die Fernbedienung dient auch zum Eingeben und Speichern der Abgleichschritte. Bis auf die Cut-Off-Einstellung, die immer vor der Ug2 Einstellung erfolgen muß, nehmen Sie den Abgleich nach Bildschirmdarstellung vor. Bei der Bildröhren-Einblendung sind auch die CCU Varianten sowie die ca.-Einstellwerte angegeben. Bevor Sie in den Service-Mode gehen, stellen Sie den Kontrast auf 44 und die Helligkeit auf 22 ein und speichern diese Werte jeweils ab. Die Einstellfolge für den Service-Mode entnehmen Sie bitte vom Text des Bildes: „Anordnung der Service-Mode Befehle auf der Fernbedienung".

Il telecomando servo anche a impostare e memorizzare le taratura Eccetto per la regolazione del cut-off, da effettuare sempre prima della regolazione di Ug2, tutte la taratura si effettuano secondo quanto appare sullo schermo.
Per la rappresentazione del cinescopio sono indicato anche le varianti CCU e i valori approssimativi di regolazione. Prima di commutare sul modo di servizio, regolate il contrasto su 44 e la luminosità su 22 e memorizzate questi valori.
L'ordine dell lavori di regolazione nel modo d'servizio - riportato nel testo del quadro „Posizione dei comandi servizio sul telecomando".

The remote control is also used for entering and storing adjustments. With the exception of cut-off adjustment which must always be dons prior to Ug2 adjustment, perform adjustments in accordance with screen display.
The display faded in on the screen also specifies the CCU variants as well as the approx., setting values. Before you enter the service mode , set contrast to 44 and brightness to 22 and store each of these values. The Adjustment sequence for the service mode is indicated in the pictures: „Arrangement of service mode commands on the remote control".

La télécommande sert aussi à entrer et à mémoriser les stades d'alignement. A l'exception du réglage du Cut Off qui doit toujours être fait avant le réglage de l'Ug2 procédez la mise au point d'après l'image. Les messages en superposition à l'écran donnet aussi les variantes CCU ainsi le valeurs approximatives de réglage.
Avant de vous mettre en mode service, réglez le contraste sur 44 et la luminosité sur 22 et mémoriser chacune de ces valeurs.
La série des réglages en mode service vous est donnée par le texte de l'image: „Disposition des ordres de commande en mode service sur e télécommande".

| Anzeigefunktion<br>Funzione di compensazione<br>Alignment function<br>Fonction d'alignement | Anzeige-Bildröhre z. B.<br>Inticatore-cinescopio p. es.<br>Display-picture tube e. g.<br>Affichage écrab p. ej. | Einstellwerte / Besonderheiten<br>Particolarita della posizionatura / Valori di pos.<br>Settings / special features<br>Valeurs de réglage / Particularités |
|---|---|---|
| 0 | SERVICE<br>Program | |
| 1 vert. Amplitude<br>ampiezza verticale<br>vertical ampltude<br>amplitude verticale | SERVICE<br>V-Amp<br>xxx | |
| 2 vertical Symmetrie<br>simmetria verticale<br>vertical symmetry<br>symétrie verticale | SERVICE<br>V-Sym<br>xxx | |
| 3 vertical Linearität<br>linearita verticale<br>vertical linearity<br>linéarité verticale | SERVICE<br>V-Lin<br>xxx | Optimale Einstellung — FuBK-Farbtestbild<br>Regolazione ottimale — Immagine di prova colore (FuBK)<br>Optimum setting — Color test pattern (FuBK)<br>Réglage optimal — Mire de couleur (FuBK) |
| 4 horizontal Amplitude<br>ampiezza orizzontale<br>horizontal amplitude<br>amplitude horizontale | SERVICE<br>H-Amp<br>xxx | |
| 5 horizontal Lage<br>posizione orizzontale<br>horizontal position<br>position horizontale | SERVICE<br>H-Pos<br>xxx | |
| 6 Austast-Lage<br>posizione soppressione<br>Blanking position<br>position suppression | SERVICE<br>Blank Pos<br>xxx | Optimale Einstellung<br>Regolazione ottimale<br>Optimum setting<br>Réglage optimal |
| 7 horizontal Lage VT<br>posizione orizzontale TV<br>horizontal position TT<br>position horizontale TT | SERVICE<br>Text Pos<br>xxx | |
| 8 OW-Amplitude 1<br>ampiezza EO<br>EW amplitude<br>amplitude EO | SERVICE<br>EW-Amp 1<br>xxx | |
| 9 OW-Amplitude 2<br>ampiezza EO<br>EW amplitude<br>amplitude EO | SERVICE<br>EW-Amp 2<br>xxx | Optimale Einstellung / Wechselseitig<br>Regolazione ottimale / Alternato<br>Optimum setting / Reciprocal (ly)<br>Réglage optimal / Alteernativement |
| 10 Trapez-Korrektur 1<br>correz. trapezoidale<br>trapezium comp.<br>correction trapèze | SERVICE<br>Trapez 1<br>xxx | |
| 11 Trapez-Korrektur 2<br>correz. trapezoidale<br>trapezium comp.<br>correction trapèze | SERVICE<br>Trapez 2<br>xxx | |
| 12 Umschaltpunkt 1<br>punto di commutaz.<br>switch.over point<br>point de commutation | SERVICE<br>Sw-Over 1<br>xxx | nicht verstellen<br>non spostare<br>do not adjust<br>ne pas dérégler |



# Abgleich-Anweisung / Istruzioni Allineamento / Adjustment procedure / Instructions d'alignement

| Anzeigefunktion<br>Funzione di compensazione<br>Alignment function<br>Fonction d'alignement | Anzeige-Bildröhre z. B.<br>Inticatore-cinescopio p. es.<br>Display-picture tube e. g.<br>Affichage écrab p. ej. | Einstellwerte / Besonderheiten<br>Particolarita della posizionatura / Valori di pos.<br>Settings / special features<br>Valeurs de réglage / Particularités |
|---|---|---|
| 13 Umschaltpunkt 2<br>punto di commutaz.<br>switch.over point<br>point de commutation | SERVICE<br>Sw-Over 2<br>xxx | Keine Einstellung vornehmen<br>non effettuaro alcuna regolazione<br>do not adjust<br>ne pas effectuer de réglage |
| 14 Y-Verzögerung<br>ritordo Y<br>Y delay<br>retard YRéglage optimal | SERVICE<br>Y - Delay<br>xxx | Optimale Einstellung<br>Regolazione ottimale<br>Optimum setting<br>Réglage optimal |
| 15 Farbhilfsträger Osz. Einstellung<br>Osc. del posizionatore colore<br>sub-carrier osc. adjustment<br>réglage de l'oscillateur de la porteuse coleur | SERVICE<br>Colour VCO<br>xxx | Schwebungsnull einstellen<br>pos. su battimento<br>set beat<br>réglage du zéro flottant |
| 16 Cut-off<br><br>Schwarzwert<br>livello nero<br>blacke level<br>valeur de noire | SERVICE<br>Ug2 Test<br>xxx | mt P 363 (Meßmpuls an Kolektor T 373 einstellen.<br>Regolare con P 368 (impulsi di misura) nel collettore T 373<br>Adjust using P 368 (measuring pulses) on collector T 373<br>avec P 368 régler (impulsion de mesure) sur le collecteur T 373<br>mit P 362 den höchsten der drei angezeigten Werte auf 50 ± 10 abgleichen<br>Tarare con P 362 su 50 ± 10 il valore massimo fra i tre indicati<br>Use P 362 to adjust the highest of the three displayed values to 50 ± 10<br>Aligner sur 50 ± 10 au moyen de P 362 la plus grande des trois valeurs affichées<br>sw, ww, ~170 V |
| 17 Grauwert<br>livello grigi<br>grey level<br>valeur de noir | SERVICE<br>Grey<br>xxx xxx xxx | Stellen Sie durch Abtasten der Werte im Rot-Grün-Blau Einblendfenster die empfindlichste Katode fest, dieser Wert läßt sich nicht verändern! - Speichertaste drücken - Die beiden anderen Werte so verändern und jeweils speichern, bis das Bild unbunt erscheint. Der von Feld zu Feld springende Pfeil zeigt an, welcher Wert jeweils zu verändern ist. (dto. bei WHITE LEVEL)<br>Individuate il catodo più sensibile con la scansione dei valori rosso-verde-blu nel finestra del quadro: questo valore non e modificabilo! - premete il pulsante di memorizzazione - Modificate e memorizzate gli altri due valori allo stesso modo, finché il quadro si neutralizza. La freccia che salta da un campo all'altro indica il valore da modificare. (lo stesso vale per il WHITE LEVEL)<br>Ascertain the most sensitive cathode by scanning the values in the red/green/blue display window. This value cannot be altered - press memory button - Alter the other two values until picture becomes achromatic, then store each of these values. The arrow jumping from box to box indicates the value to be altered. (same applicable to WHITE LEVEL)<br>Repérer la cathode la plus sensible en explorant les valeurs dans la fenêtre de réglage rouge-vert-bleu: cette valeur ne peut pas être modifiée! - appuyez sur la touche de mémorisation; modifier les deux autres valeurs de telle sorte que l' image apparaisse neutre et mémoriser-les. La flèche qui saute d'un champ à l'autre indique quelle valeur doit chaque fois être modifiée. (idem pour WHITE LEVEL) |
| 18 Weißwert<br>livello bianco<br>white level<br>valeur de blanc | SERVICE<br>White<br>xxx xxx xxx | Die beiden dominierenden Farben so verändern daß ein optimales Weiß erscheint.<br>Modificare i due colori dominati in modo tale che appare un bianco ottico.<br>Modify the two dominant colours to achieve optimum white.<br>Modifier les deux valeurs dominantes de manière à obtenir un blanc optimal |
| 19 Option Byte 1 | SERVICE<br>Option 1<br>7 6 5 4 3 2 1 0<br>0 1 0 0 0 1 1 0 | Achtung!<br>Hier nur Eingaben machen und Speicherung vornehmen:<br>a) im notwendigen Reparaturfall<br>b) bei gewünschten Programm-/Normänderungen<br>Abgleichart siehe Option Bytes Tabelle<br><br>Attenzione!<br>Qui effettuare solo ingressi e memorizzazioni:<br>a) in caso di necessita di riparazione<br>b) per modifiche di programma/norma<br>Per il tipo di sintonia vedi l'opzione tabella bytes<br><br>Caution!<br>Here inputs and memorizing:<br>a) in the event of necessary repairs<br>b) if you wish to alter programs/norms for alignment method see bytes option<br><br>Attention!<br>N'effectuer ici des modifications que:<br>a) dans le cas où une réparation est nécessaire<br>b) dans le cas d'une modification de programme/norme souhaitée<br>Type de réglage voir tableau des bytes d'option |
| 20 Option Byte 2 | SERVICE<br>Option 2<br>7 6 5 4 3 2 1 0<br>1 1 1 1 1 1 1 1 | |
| 21 Option Byte 3 | SERVICE<br>Option 3<br>7 6 5 4 3 2 1 0<br>1 0 0 0 0 0 1 1 | |
| 22 Option Byte 4 | SERVICE<br>Option 3<br>7 6 5 4 3 2 1 0<br>0 0 1 1 0 1 1 0 | |
| 23 Loudness | SERVICE<br>Loudness<br>xxx | |
| 24 PIP horizontal Lage<br>posizione orizz. PIP<br>PIP horizontal position<br>position horizontale PIP | SERVICE<br>PIP H-Pos<br>xxx | |

**Hinweis**

Abgleichpositionen 1-6 und 8-13 sind getrennt bei folgenden TV-Normen einzustellen: (PAL-SECAM-4:3)-(PAL 16:9)-(NTSC M) - (VTR).
Abgleichposition 14 ist getrennt einzustellen bei (PAL Digi P aus / PAL Digi P ein, PAL VTR)-(SECAM Digi P aus / Digi P ein).
Abgleichposition 15 PAL und NTSC M.

**Avvertenza**

Posizione allineamento 1-6 e 8-13 e da regolare separatamente per norma: (PAL- SECAM - 4:3) - (PAL 16:9) - (NTSC M) - (VTR).
Posizione allineamento 14 regolare separatamente i (PAL Digi P spento / PAL Digi P acceso, PAL VTR) - (SECAM Digi P spento / Digi P acceso).
Posizione 15 PAL e NTSC M.

**Note**

Adjustments for positions 1-6 and 8-13 has to be done separately for the following standard: (PAL-SECAM-4:3)-(PAL 16:9)-(NTSC M) - (VTR).
Adjustment position 14 needs separate adjustment for (PAL Digi P off / PAL Digi P on, PAL VTR) - (SECAM Digi P off / Digi P on).
Adjustment position 15 PAL and NTSC M.

**Indication**

Les réglages des points la 6 et 8 à 13 doivent être effectués séparément pour chaque standard: (PAL- SECAM - 4:3) - (PAL 16:9) - (NTSC M) - (VTR).
Les réglage du point 14 nécessite un alignement séparé pour (PAL Digi P arrêt / PAL Digi P marche, PAL VTR) - (SECAM Digi P arrêt / Digi P marche).
Effectuer le réglage du point 15 en PAL et en NTSC M.

| Norm | DTI | VTR |
|---|---|---|
| PAL | aus<br>ein<br>—<br>— | —<br>—<br>VTR<br>SVHS |
| SECAM | aus<br>ein<br>—<br>— | —<br>—<br>VTR<br>SVHS |
| NTSC | aus<br>ein<br>— | —<br>—<br>VTR |

| Norm | DTI | VTR |
|---|---|---|
| PAL | spento<br>inserito<br>—<br>— | —<br>—<br>VTR<br>SVHS |
| SECAM | spento<br>inserito<br>—<br>— | —<br>—<br>VTR<br>SVHS |
| NTSC | spento<br>inserito<br>— | —<br>—<br>VTR |

| Norm | DTI | VTR |
|---|---|---|
| PAL | off<br>on<br>—<br>— | —<br>—<br>VTR<br>SVHS |
| SECAM | off<br>on<br>—<br>— | —<br>—<br>VTR<br>SVHS |
| NTSC | off<br>on<br>— | —<br>—<br>VTR |

| Norm | DTI | VTR |
|---|---|---|
| PAL | arrêt<br>marche<br>—<br>— | —<br>—<br>VTR<br>SVHS |
| SECAM | arrêt<br>marche<br>—<br>— | —<br>—<br>VTR<br>SVHS |
| NTSC | arrêt<br>marche<br>— | —<br>—<br>VTR |

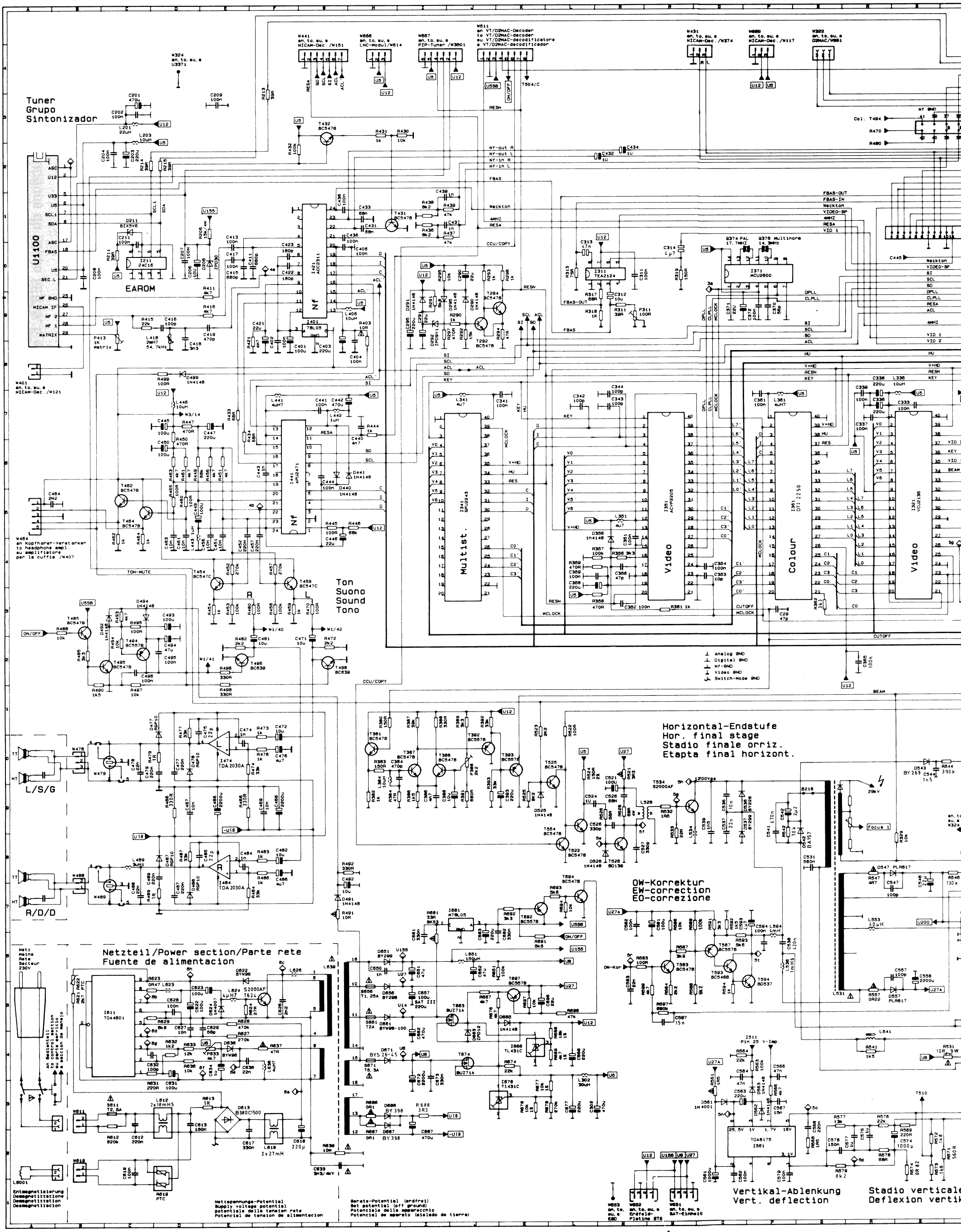
Tuner
Grupo
Sintonizador
EAROM
Ton
Suono
Sound
Tono
Horizontal-Endstufe
Hor. final stage
Stadio finale orriz.
Etapta final horizont.
L/S/G
R/D/D
OW-Korrektur
EW-correction
EO-correzione
Netzteil/Power section/Parte rete
Fuente de alimentacion
Vertikal-Ablenkung
Vert. deflection
Stadio verticale
Deflexion vertik
Multist.
Video
Colour
Video
Analog GND
Digital GND
Nf-GND
Video GND
Switch-Mode GND



3 - 43h

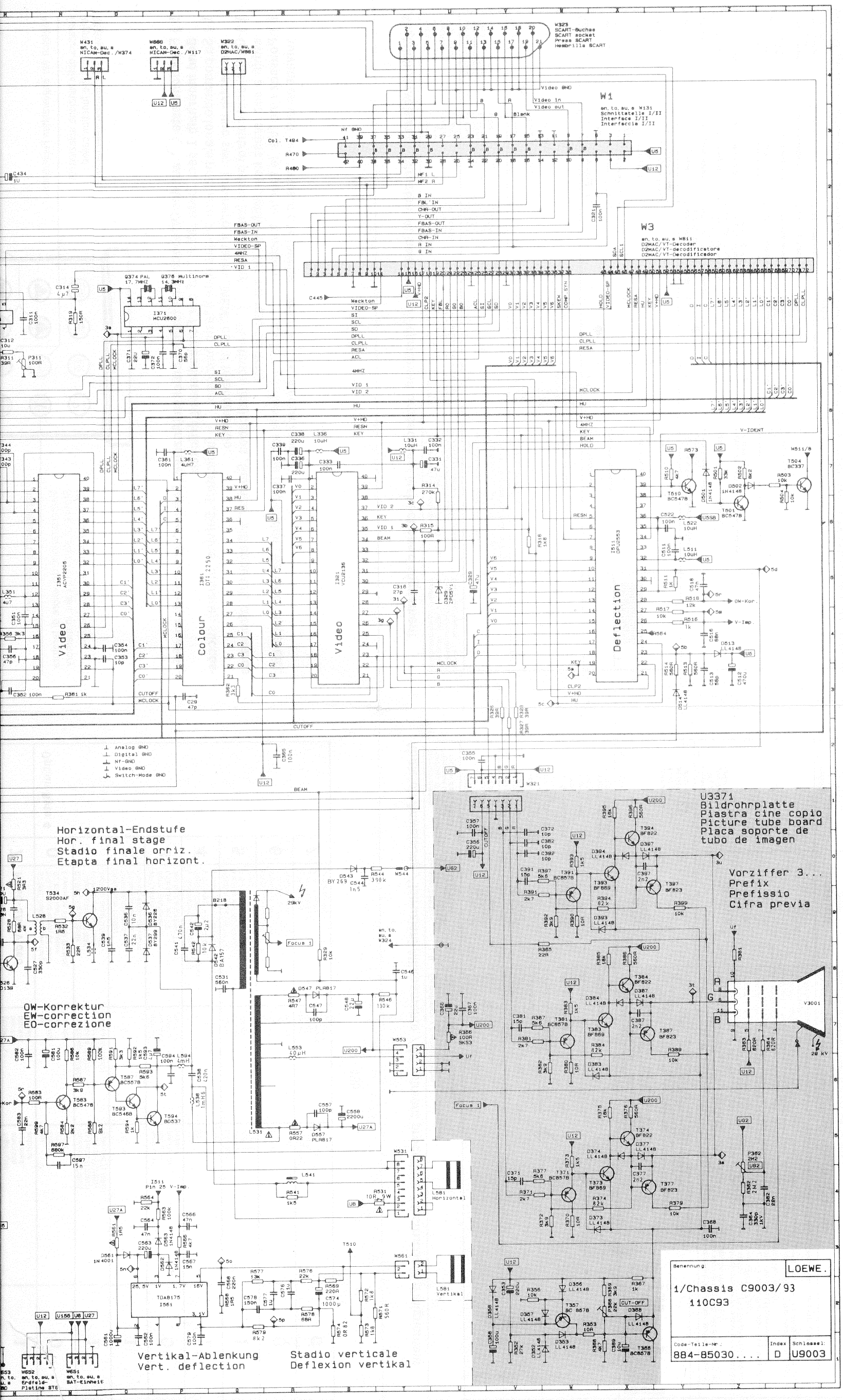


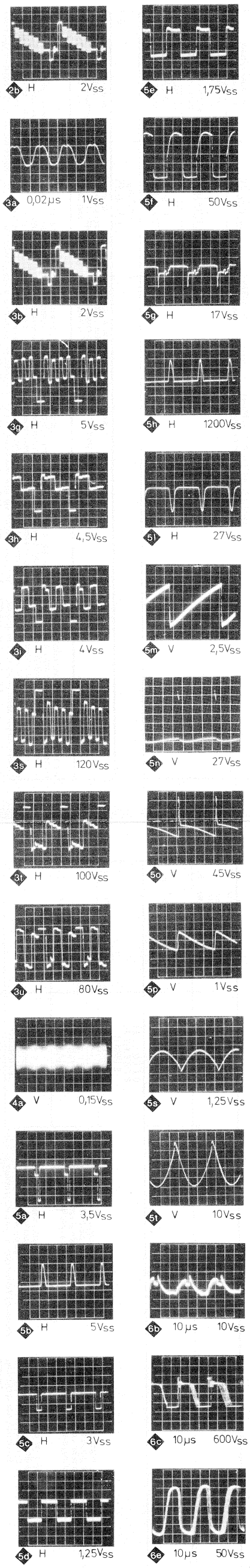


igital e Piastra Chinescopio e Presa Peritelevisione · Stereo Digital Chassis C 9003 & Picture Tube Board & Scart Socket · Châssis C 9003 Stéréo Digital et P

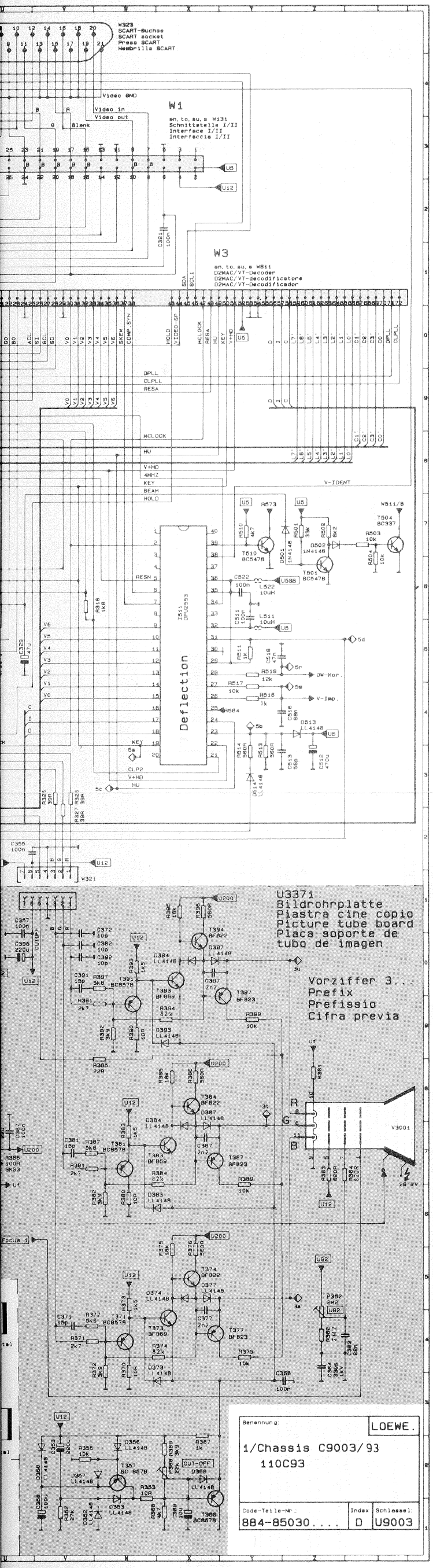


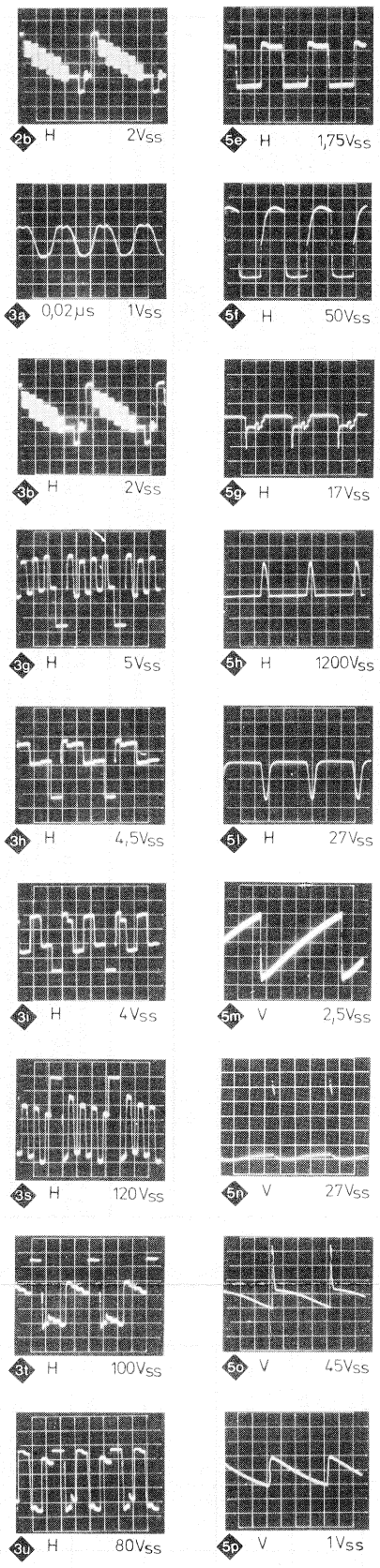


| Pos. | Chassis .134 | Chassis .135 | Chassis .136 |
|---|---|---|---|
| C 313 | 47N | 47N | 47N |
| C 314 | 4U7 | 4U7 | 4U7 |
| C 3362 | 22N | 22N | 22N |
| C 536 | 10N | 10N | 10N |
| C 537 | 22N | 22N | 22N |
| C 538 | 420N | 420N | 420N |
| C 541 | 470N | 470N | 470N |
| C 542 | 2U2 | 2U2 | 2U2 |
| C 544 | 1N5 | 1N5 | 1N5 |
| C 574 | 1000U | 1000U | 1000U |
| C 618 | 220U | 220U | 220U |
| D 542 | BA 157 | BA 157 | BA 157 |
| D 543 | BY 269 | BY 269 | BY 269 |
| D 613 | B380C1500 | B380C1500 | B380C1500 |
| D 671 | BYS 26-45 | BYS 26-45 | BYS 26-45 |
| D 686 | BY 398 | BY 398 | BY 398 |
| D 687 | BY 398 | BY 398 | BY 398 |
| I 474 | TDA 2030 A | TDA 2030 A | TDA 2030 A |
| I 484 | TDA 2030 A | TDA 2030 A | TDA 2030 A |
| L 538 | 1,6MH | 1,6MH | 1,6MH |
| L 541 | 278-20366 | 278-20366 | 278-20366 |
| L 553 | 40UH | 40UH | 40UH |
| L 612 | 2 X 18MH5 | 2 X 18MH5 | 2 X 18MH5 |
| L 618 | 2 X 27MH | 2 X 27MH | 2 X 27MH |
| L 624 | 4UH7 | 4UH7 | 4UH7 |
| L 639 | 490-19994 | 490-19994 | 490-19994 |
| Q 378 | - | - | - |
| R 3362 | 2M2 | 2M2 | 2M2 |
| R 3374 | 82K | 82K | 82K |
| R 3384 | 82K | 82K | 82K |
| R 3394 | 82K | 82K | 82K |
| R 362 | 3K3 5% | 3K3 5% | 3K3 5% |
| R 365 | - | - | - |
| R 466 | 330R 4W | 330R 4W | 330R 4W |
| R 468 | 330R 4W | 330R 4W | 330R 4W |
| R 479 | 1R 5% | 1R 5% | 1R 5% |
| R 489 | 1R 5% | 1R 5% | 1R 5% |
| R 516 | 1K 1% | 1K 1% | 1K 1% |
| R 531 | 10R 9W | 10R 9W | 10R 9W |
| R 542 | 10K 4W | 10K 4W | 10K 4W |
| R 544 | 390K | 390K | 390K |
| R 546 | 130K 1% | 130K 1% | 130K 1% |
| R 571 | 560R | 560R | 560R 2% |
| R 574 | 0R82 4W | 0R82 4W | 0R82 4W |
| R 579 | 8K2 2% | 8K2 2% | 8K2 2% |
| R 613 | 1R 4W | 1R 4W | 1R 4W |
| R 619 | 372-73056 | 372-73056 | 372-73056 |
| R 688 | 3R3 17W | 3R3 17W | 3R3 17W |
| T 624 | S 2000 AF | S 2000 AF | S 2000 AF |
| U 640 | - | - | - |

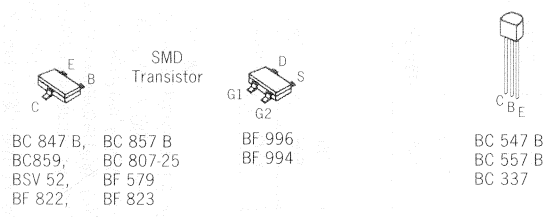




**gital Chassis C 9003 & Picture Tube Board & Scart Socket · Châssis C 9003 Stéréo Digital et Platine Tube Image et Presa Péritélévisione**

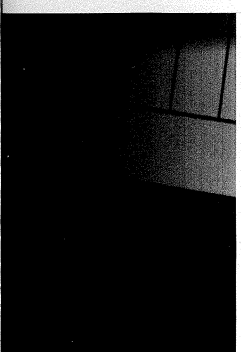

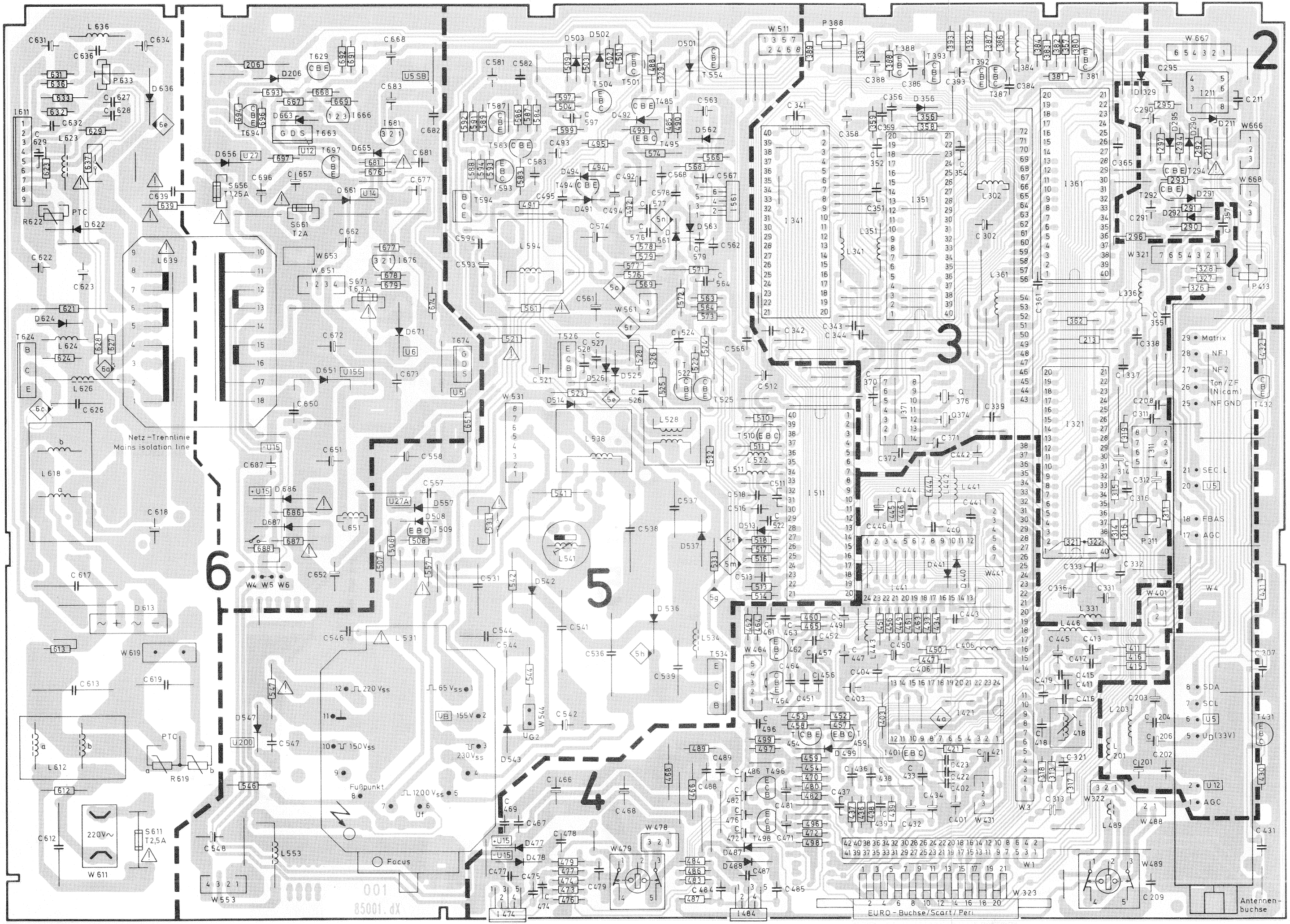


**Ltpl. Chassis C 9003 / Piastra telaio C 9003 / Chassis P.C.B C 9003 / Platine Châssis C 9003** **884-85030.134 / 135 / 136**

Lötseite - Lato saldatura - Solder side - Côté soudure

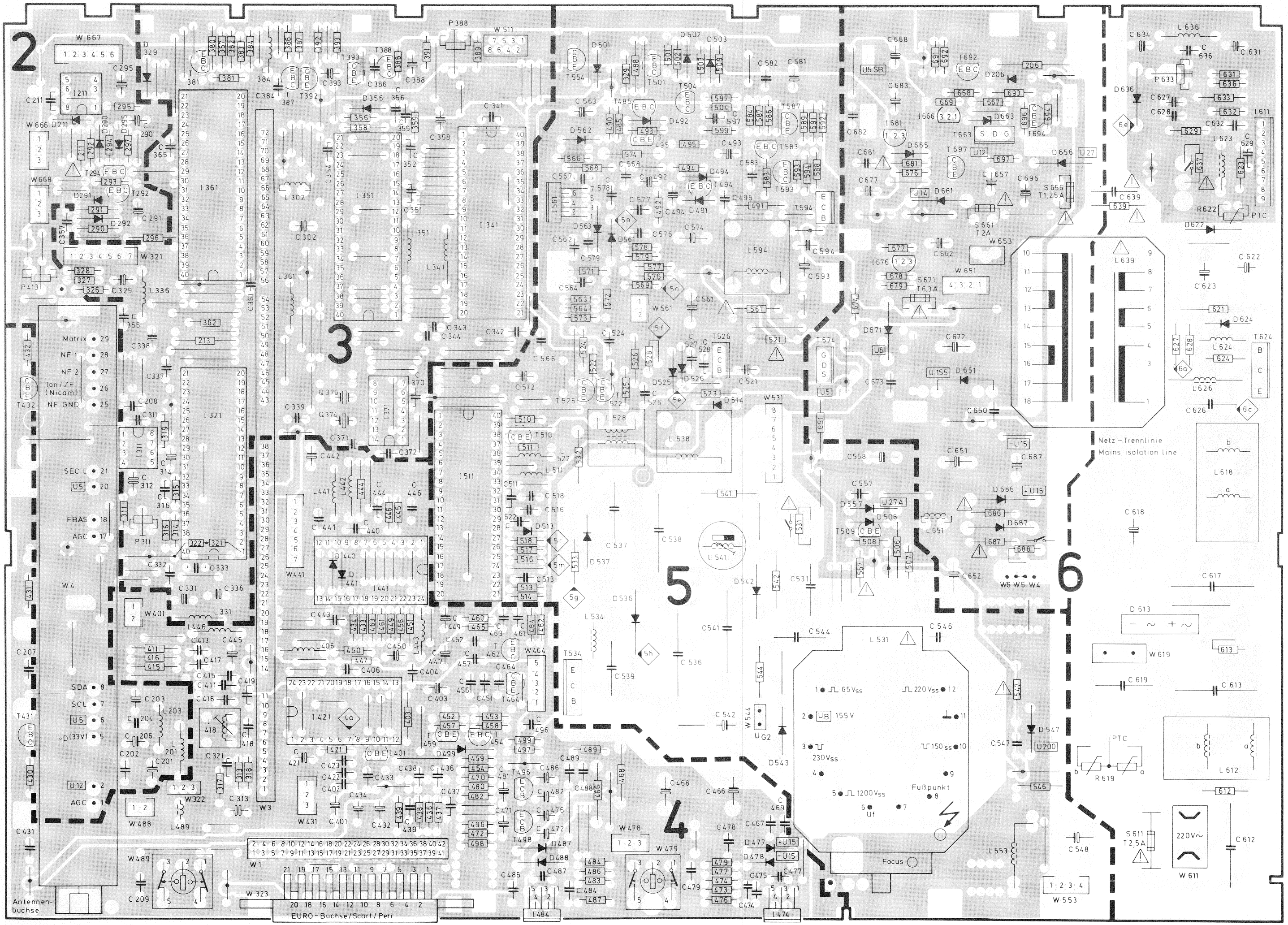


**Ltpl. Chassis C 9003 / Piastra telaio C 9003 / Chassis P.C.B C 9003 / Platine Châssis C 9003** **884-85030.134 / 135 / 136**

**Bestückungsseite - Lato componenti - Component side - Côte composants**